HIGH TEMPERATURE
VENTILATION SOLUTIONS

NUAIRE. FOR THE COMPLETE VENTILATION SOLUTION

WITH A RECORD OF QUALITY WHICH IS THE ENVY OF THE INDUSTRY...

...Nuaire strives for continuous improvement at the Nuaire factory in the UK.

Nuaire has over thirty years experience in the smoke ventilation industry and its project managers were instrumental in establishing the first Impulse system in the UK. This experience within the smoke extraction sector means Nuaire has a complete range of certified smoke rated ventilation units tested to EN12101-3:2002.

UK MADE

CONTENTS

CAR PARK	
CAR PARK VENTILATION - HOW IT WORKS	4
JET FAN VENTILATION	6
INDUCTION VENTILATION	10
AXIALS	
HIGH TEMPERATURE SINGLE STAGE AXIALS	16
HIGH TEMPERATURE TWO STAGE AXIALS	17
ROOF VERTICAL DISCHARGE	19
AXIAL ANCILLAIRES	20
SINGLE AND TWIN FANS	
INLINE CENTRIFUGAL SINGLE FAN	22
INLINE CENTRIFUGAL TWIN FAN	28

CAR PARK VENTILATION HOW IT WORKS

With jet fans available in both axial and centrifugal versions, Nuaire's car park ventilation system has a number of benefits. Not only does the low depth unit save space and money by eliminating the need for complicated and expensive ductwork, but it is also extremely energy efficient as it monitors the air quality and operates the system at its optimum level, reducing the running costs by up to 40%. Also, fewer fans are required as they distribute the air over such a large area.

One of the biggest hazards in the event of a fire is that of smoke inhalation. Nuaire smoke rated control systems provide a flexible directional flow to respond to any fire location, containing, channelling and removing the smoke to facilitate safe evacuation and more effective fire fighting access.

Units have a unique mounting bracket to allow for quick and easy installation in two simple stages and inlet and outlet silencers that ensure low noise levels. Most importantly, all equipment is safety tested to EN12101-3 at both 300°/400°C for 2 hours.

The carpark jet fan system is used to control and remove contaminants on a day to day basis, whilst ensuring that smoke is removed quickly and efficiently in the event of a fire. The system utilises a number of strategically positioned jet fans, mounted on the ceiling, that direct the fumes and smoke towards a designated point of exhaust.

This in effect creates a virtual smoke barrier ensuring quick and effective clearance whilst keeping the rest of the car park smoke free. This removes the need for complicated ductwork systems and optimises space.

UNIQUE MOUNTING BRACKET

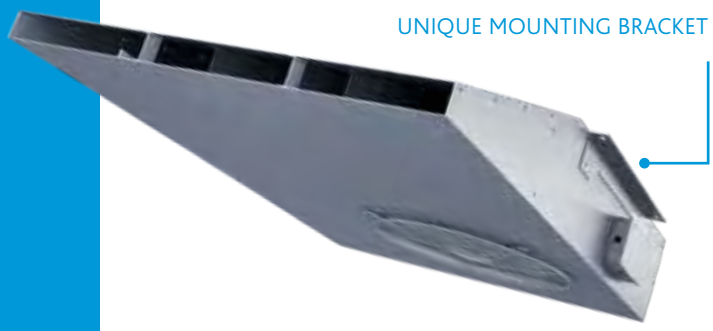

AIRFLOW UNDER FIRE CONDITIONS

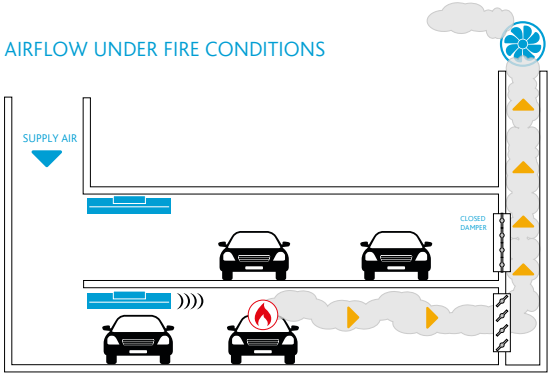

UK MADE

EXAMPLE OF JET FAN SYSTEM

1

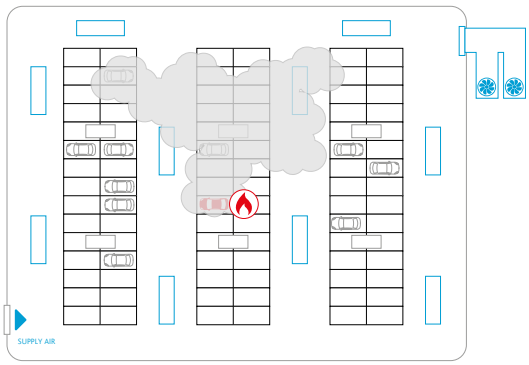

STAGE 1

In day-to-day operation the system runs in low speed ensuring carbon monoxide and other contaminants are within acceptable limits. Control is via strategically placed detectors. If a fires starts in one of the vehicles, and smoke spreads, the system starts.

2

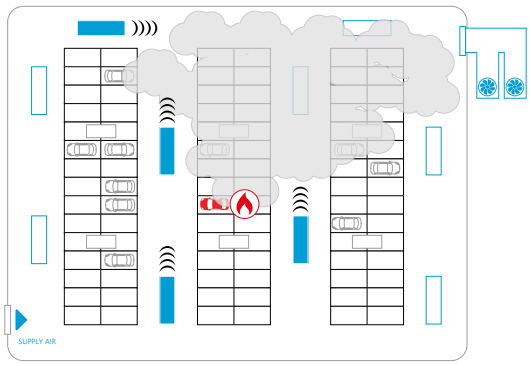

STAGE 2

The smoke detection system will identify the situation, activate the fire alarm system and then switch to smoke mode.

3

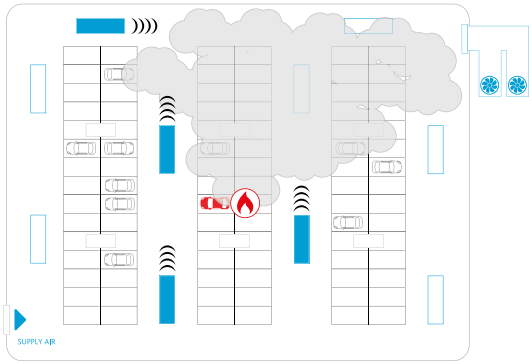

STAGE 3

Smoke detectors throughout the car park identify the units which are located at the affected fire zone and increase their fan speed to maximum.

4

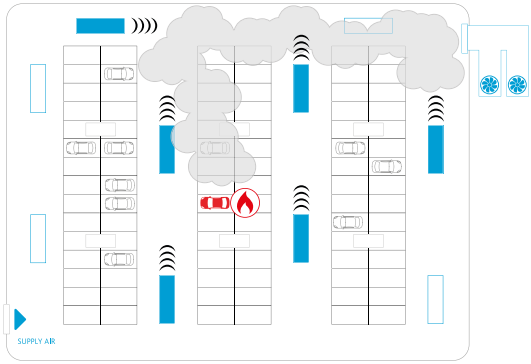

STAGE 4

The smoke is contained and directed towards the main exhaust unit, where it can be safely extracted into the atmosphere. This minimises the spread of smoke within the car park, keeping large areas clear and enabling the area to be quickly and safely evacuated.

WHY CHOOSE INDUCTION OVER IMPULSE?

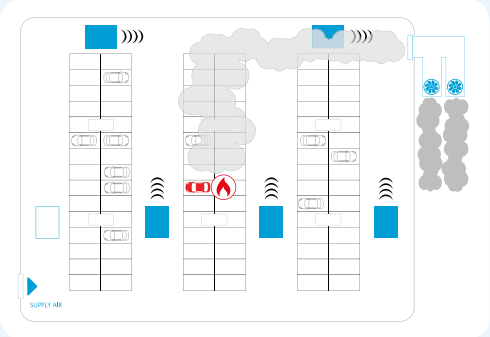

INSTALLED COSTS

Reduced number of units, resulting in a reduced project installed cost.

BACKWARD CURVED IMPELLER

Suitable for high thrust and low noise applications.

LOW PROFILE

Ideal for reduced height area and can prove more suitable than a jet fan and ducted installations.

SUITABLE FOR HIGH CEILINGS

Draws the air upwards, providing a more effective method of extracting the smoke than a jet or axial installation.

THRUST

The induction range will provide a greater range of area (m^2) coverage which can result in a lower number of units required to service the car park.

CAR PARK IMPULSE SYSTEM SVT2 & SVT28

Car park ventilation systems are used to control and remove pollutants, such as carbon monoxide on a day to day basis, whilst ensuring in an emergency situation smoke is removed quickly and efficiently to aid in the safe evacuation of occupants.

KEY BENEFITS:

- **LOW DEPTH**
- **COST SAVING** - REDUCED DUCTWORK
- **REDUCED INSTALLATION TIME** - 2 STAGE 'QUICK' INSTALLATION
- **ACOUSTICALLY LINED**
- **ALUZINC** - HIGHLY ANTI-CORROSIVE PROPERTIES
- **LOWEST NOISE LEVELS** - FITTED WITH INLET AND OUTLET SILENCERS
- **AVAILABLE IN A FULLY REVERSIBLE OPTION**
- **TESTED TO EN12101-3**
- **ISO 13350: 2015**

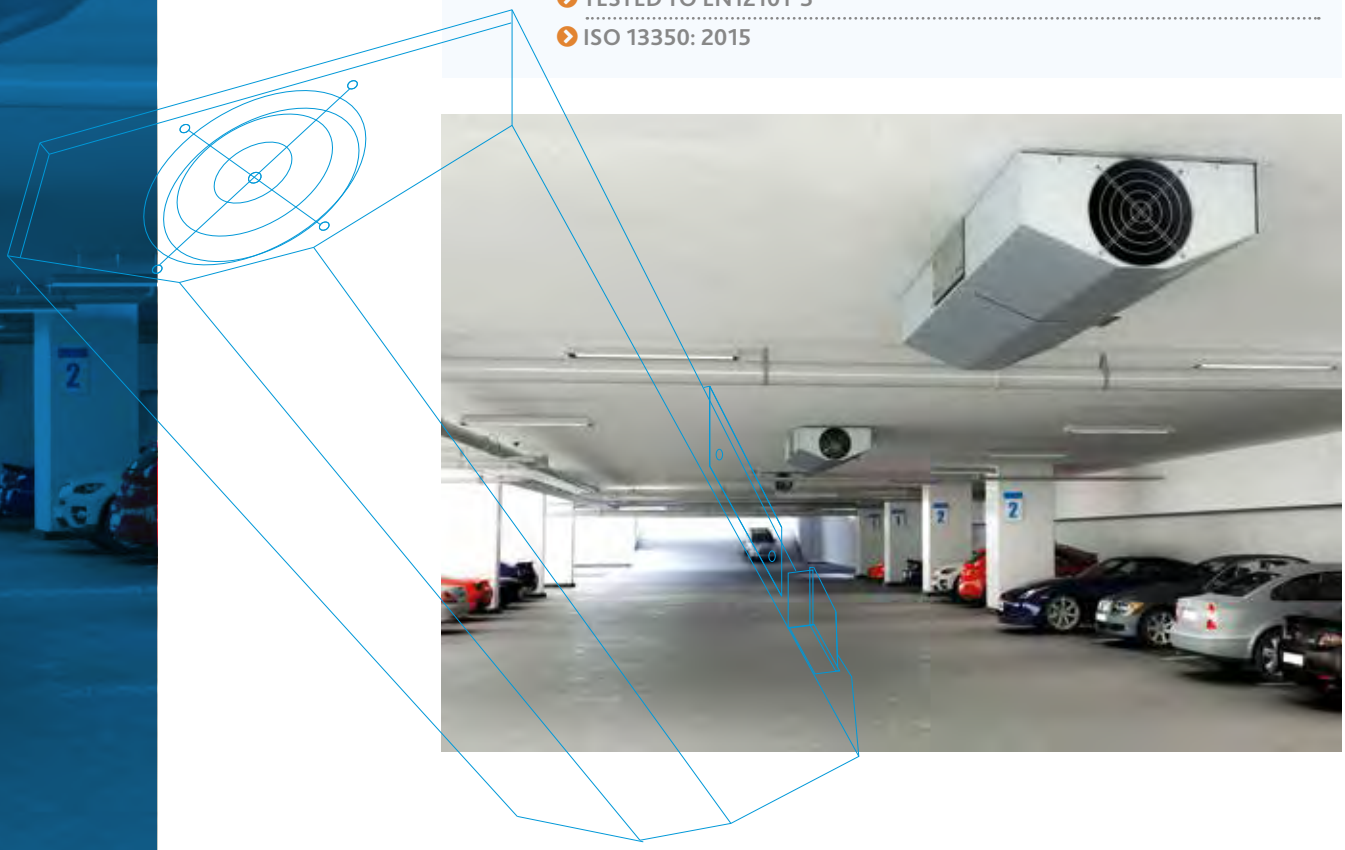

UK MADE

25N THRUST | 50N THRUST | 50Hz | 60Hz | 300°C/ 400°C

CONSULTANTS SPECIFICATION

CASING

The complete units, including attenuation, are of flush design to ensure no dust/debris build up. The case is made from Aluzinc (additional finishes are available) and is acoustically lined.

MOTOR

Motors are totally enclosed and protected to IP55 with Class H insultation. Motors are available in two speed or single speed (with VSD operation).

CERTIFICATION AND OPERATING TEMPERATURE

Complete units are tested to BS EN12101-3 for both 300°C/2 and 400°C/2.

IMPELLER

Available in either aluminium or steel aerofoil blades to optimise both air performance and sound to suit the project requirements.

INSTALLATION

The units are designed for flush mounting ceiling installation using our unique mounting bracket that allows for quick 2 stage site fitting. Units are low profile: 25N units are 325mm and 50N are 407mm deep.

PERFORMANCE

The units are available in 2 thrust output options:

- 50/12N
- 25/5N
- Larger bespoke units are available - contact Nuaire for details.

AIRFLOW

Inlet guards are fitted for safety purposes and to prevent debris from entering the fan. The unit is fitted with a specifically designed airflow deflector to direct the jet stream from the fan at the required angle sufficient to overcome the natural buoyancy effect of the smoke. Reversible options are available.

SYSTEM DESIGN

Nuaire's acoustically treated Impulse fans SVT2 & SVT28 are typically used as part of a car park ventilation system to control and remove pollutants, such as carbon monoxide and in case of a fire scenario. An Impulse system is cost saving due to a reduced need for ductwork. The Impulse fans are strategically distributed throughout the car park in accordance with our specialist design.

ANCILLARIES

- Thermistors
- Pre-wired isolators
- Isolators
- Anti-condensation motor heaters

APPLICATIONS

Certified for use with sprinkler systems, contact Nuaire for additional information.

CAR PARK IMPULSE SYSTEM SVT2 & SVT28

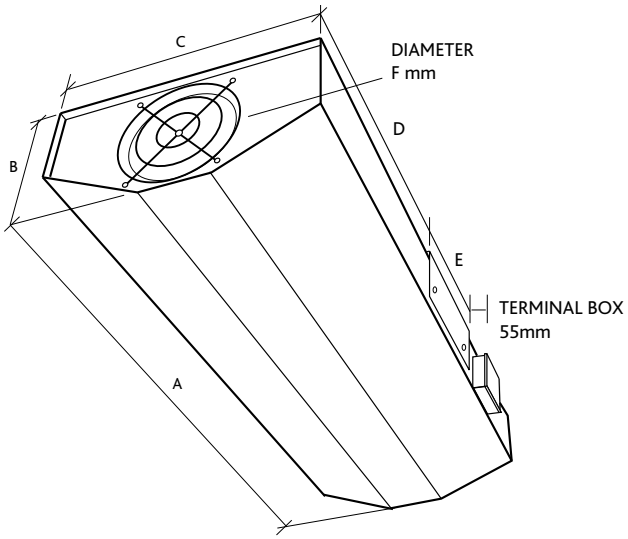

CODING SVT28-1EG

SVT2	8	-	1	E	G
1	2		3	4	5

SVT28-1 (AE) (GJ)

1. SVT2 - Axus Impulse Axial range
2. No prefix - 300°C 8 - 400°C
3. Case size/performance range
4. Impeller angle (A-E)
5. No suffix - 50Hz
   G-460v 60Hz
   J-380v 60Hz

DIMENSIONS (MM) AND WEIGHT

MODEL	A	B	C	D	E	F	WEIGHT
SVT2-1 (A-E)	2300	325	702	825	600	306	94Kg
SVT2-2 (A-E)	2300	407	702	825	600	350	113Kg

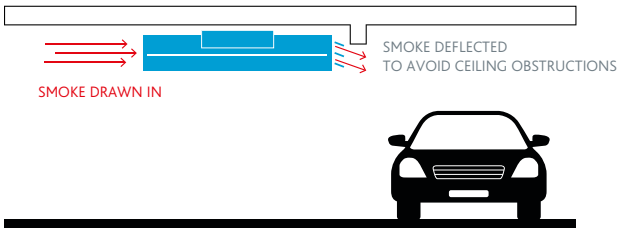

300°C

TECHNICAL AND PERFORMANCE DATA

	50Hz		60Hz	
FAN REFERENCE	**SVT2-1E**	**SVT2-2E**	**SVT2-3EJ**	**SVT2-3EG**
Thrust Newtons: Full/Half Speed	25/5	50/12	50/12	50/12
Airflow m^3/s: Full/Half Speed	1.1/0.5	1.8/0.9	1.8/0.9	1.8/0.9
Motor Kw: Half/Full Speed	1.1/0.23	1.1/0.23	1.5/0.34	1.5/0.34
Protection Class	IP55	IP55	IP55	IP55
Insulation	H	H	H	H
Electrical Supply	400/3/50	400/3/50	380/3/60	460/3/60
Motor FLC amps: Full/Half Speed	2.7/0.83A	2.7/0.83A	3.41/1.02A	2.82/0.84A
Motor SC amps: DOL Full/Half Speed	14.5/2.9	14.5/2.9	19.1/3.8	15.8/3.1
Speed RPM: Full/Half Speed	2775/1370	2775/1370	3330/1650	3330/1650
Sound dBA @1m: Full/Half Speed	67/52	67/54	71/66	71/66
Material Finish*	Aluzinc	Aluzinc	Aluzinc	Aluzinc

400°C

TECHNICAL AND PERFORMANCE DATA

	50Hz		60Hz	
FAN REFERENCE	**SVT28-1E**	**SVT28-2E**	**SVT28-2EJ**	**SVT2-2EG**
Thrust Newtons: Full/Half Speed	25/5	50/12	50/12	50/12
Airflow m^3/s: Full/Half Speed	1.1/0.5	1.8/0.9	1.8/0.9	1.8/0.9
Motor Kw: Half/Full Speed	1.1/0.23	1.1/0.23	1.5/0.34	1.5/0.34
Protection Class	IP55	IP55	IP55	IP55
Insulation	H	H	H	H
Electrical Supply	400/3/50	400/3/50	380/3/60	460/3/60
Motor FLC amps: Full/Half Speed	2.7/0.83A	2.7/0.83A	3.41/1.02A	2.82/0.84A
Motor SC amps: DOL Full/Half Speed	14.5/2.9	14.5/2.9	19.1/3.8	15.8/3.1
Speed RPM: Full/Half Speed	2775/1370	2775/1370	3330/1650	3330/1650
Sound dBA @1m: Full/Half Speed	67/52	67/54	71/66	71/66
Material Finish*	Aluzinc	Aluzinc	Aluzinc	Aluzinc

*Other finishes are available upon request

CAR PARK INDUCTION FANS SVTC & SVTC8

Car park ventilation induction fan systems are used to control and remove pollutants such as carbon monoxide on a day to day basis, whilst ensuring in an emergency situation smoke is removed quickly and efficiently to aid in the safe evacuation of individuals.

Nuaire offer **50N** and **100N** thrust both in **50/60Hz** models.

KEY BENEFITS:

- LOW DEPTH
- COST SAVING - ELIMINATES NEED FOR DUCTWORK
- TESTED TO EN12101-3
- LARGE COVERAGE MEANS FEWER FANS
- ISO 13350:2015

UK MADE

50N THRUST | 100N THRUST | 50Hz | 60Hz | 300°C/ 400°C

CONSULTANTS SPECIFICATION

CASING

The complete units are of flush design to ensure no dust/debris build up, and suits most applications with a low profile. The case is made from galvanised steel (additional finishes are available).

MOTOR

Motors are totally enclosed and protected to IP55 with Class H insulation. Motors are available as either 2 speed or for inverter speed control, to work on a day to day basis and once off in an emergency situation.

CERTIFICATION AND OPERATING TEMPERATURE

Complete units are tests to BS EN12101-3.
- F300°C/2
- F400°C/2

IMPELLER

The impeller is a high efficiency backward curved centrifugal type manufactured from galvanised steel.

INSTALLATION

The units are designed for flush mounting ceiling installation and may only be fitted at the side brackets with certified anchoring bolts. Units are low profile to suit the majority of car park design constraints.
- 50N- 227mm
- 100N- 282mm

PERFORMANCE

The units are available in 4 thrust options:
- 100N
- 100/25N
- 50N
- 50/12N

This large coverage may result in fewer fans required.

AIRFLOW

Inlet guards are fitted for safety purposes and to prevent debris from entering the fan. The unit is fitted with a specifically designed airflow deflector to direct the jet stream from the fan at the required angle sufficient to overcome the natural buoyancy effect of the smoke.

SYSTEM DESIGN

Nuaire's induction fans SVTC & SVTC8 are typically used as part of a car park ventilation system to control and remove pollutants such as carbon monoxide and in case of a fire emergency. An induction system saves costs due to the elimination of ductwork. The induction fans are strategically distributed throughout the car park in accordance with Nuaire's specialist design.

ANCILLARIES

- Thermistors
- Pre-wired isolators
- Isolators
- Anti-condensation motor heaters

APPLICATIONS

Certified for use with sprinkler systems, contact Nuaire for additional information.

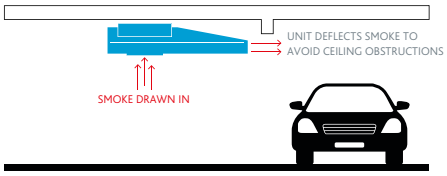

CAR PARK INDUCTION FANS SVTC & SVTC8

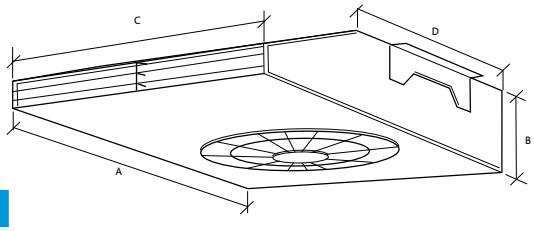

DIMENSIONS (MM) AND WEIGHT (KG)

MODEL	A	B	C	D	WEIGHT
SVTC-50	1265	230	790	710	100
SVTC-100	1900	282	1150	1150	195

CODING SVTC8-50T8G

SVTC8-50T8G

1. SVTC - Axus induction range
2. 8 - 400°C/2, no suffix - 300°C/2
3. 50 - Case size/performance range
4. T8 - Two speed 4/8 pole
5. No suffix - 400v 50Hz
   G-460v 60Hz
   J-380v 60Hz

400°C/2 - 50N

TECHNICAL AND PERFORMANCE DATA

	50Hz		60Hz			
FAN REFERENCE	SVTC8-50	SVTC8-50T8	SVTC8-50G	SVTC8-50T8G	SVTC8-50J	SVTC8-50T8J
Thrust Newtons: Full/Half Speed	50	50/12	50	50/12	50	50/12
Airflow m^3/s: Full/Half Speed	1.7	1.7/0.85	1.7	1.7/0.83	1.7	1.7/0.85
Motor Kw: Full/Half Speed	1.1	1.2/0.3	1.3	1.4/0.35	1.5	1.2/0.3
Protection Class	IP55	IP55	IP55	IP55	IP55	IP55
Insulation	H	H	H	H	H	H
Electrical Supply	400/3/50	400/3/50	460/3/60	460/3/60	380/3/60	380/3/60
Motor FLC amps: Full/Half Speed	2.92	3.21/1.37	3.06	3.14/1.33	4.07	4.35/1.88
Motor SC amps: DOL Full/Half Speed	16.35	16/4.11	14.7	20.1/4.39	22.4	23.5/5.83
Speed RPM: Half/Full Speed	1435	1430/705	1720	1720/860	1720	1720/860
Sound dBA @1m: Full/Half Speed	81	81/68	84	84/71	84	84/71
Material Finish*	Galv Steel	Galv Steel	Galv Steel	Galv Steel	Galv Steel	Galv Steel

400°C/2 - 100N

TECHNICAL AND PERFORMANCE DATA

	50Hz		60Hz			
FAN REFERENCE	SVTC8-100	SVTC8-100T8	SVTC8-100G	SVTC8-100T8G	SVTC8-100J	SVTC8-100T8J
Thrust Newtons: Full/Half Speed	100	100/25	100	100/25	100	100/12
Airflow m^3/s: Full/Half Speed	2.69	2.69/1.83	2.69	2.69/1.83	2.69	2.69/1.83
Motor Kw: Full/Half Speed	2.2	2.2/0.55	2.6	2.2/0.55	2.2	2.2/0.55
Protection Class	IP55	IP55	IP55	IP55	IP55	IP55
Insulation	H	H	H	H	H	H
Electrical Supply	400/3/50	400/3/50	460/3/60	460/3/60	380/3/60	380/3/60
Motor FLC amps: Full/Half Speed	5.8	6.03/2.26	5.94	5.2/2.13	6.17	7.64/2.89
Motor SC amps: DOL Full/Half Speed	30.16	30.2/7.23	30.4	36.9/7.03	33.9	39/10.1
Speed RPM: Half/Full Speed	1435	1435/715	1720	1720/860	1720	1720/860
Sound dBA @1m: Full/Half Speed	82	82/68	85	85/71	85	85/71
Material Finish*	Galv Steel	Galv Steel	Galv Steel	Galv Steel	Galv Steel	Galv Steel

*Other finishes available upon request

300°C/2 - 50N

TECHNICAL AND PERFORMANCE DATA

	50Hz		60Hz			
FAN REFERENCE	SVTC-50	SVTC-50T8	SVTC-50G	SVTC-50T8G	SVTC-50J	SVTC-50T8J
Thrust Newtons: Full/Half Speed	50	50/12	50	50/12	50	50/12
Airflow m^3/s: Full/Half Speed	1.7	1.7/0.85	1.7	1.7/0.85	1.7	1.7/0.85
Motor Kw: Full/Half Speed	1.1	1.2/0.3	1.3	1.4/0.35	1.5	1.2/0.3
Protection Class	IP55	IP55	IP55	IP55	IP55	IP55
Insulation	H	H	H	H	H	H
Electrical Supply	400/3/50	400/3/50	460/3/60	460/3/60	380/3/60	380/3/60
Motor FLC amps: Full/Half Speed	2.92	3.21/1.37	3.06	3.14/1.33	4.07	4.35/1.88
Motor SC amps: DOL Full/Half Speed	16.35	16/4.11	14.7	20.1/4.39	22.4	23.5/5.83
Speed RPM: Half/Full Speed	1435	1430/705	1720	1720/860	1720	1720/860
Sound dBA @1m: Full/Half Speed	84	84/68	87	87/71	87	87/71
Material Finish*	Galv Steel	Galv Steel	Galv Steel	Galv Steel	Galv Steel	Galv Steel

300°C/2 - 100N

TECHNICAL AND PERFORMANCE DATA

	50Hz		60Hz			
FAN REFERENCE	SVTC-100	SVTC-100T8	SVTC-100G	SVTC-100T8G	SVTC-100J	SVTC-100T8J
Thrust Newtons: Full/Half Speed	100	100/25	100	100/25	100	100/25
Airflow m^3/s: Full/Half Speed	2.69	2.69/1.83	2.69	2.69/1.83	2.69	2.69/1.83
Motor Kw: Full/Half Speed	2.2	2.2/0.55	2.6	2.2/0.55	2.2	2.2/0.55
Protection Class	IP55	IP55	IP55	IP55	IP55	IP55
Insulation	H	H	H	H	H	H
Electrical Supply	400/3/50	400/3/50	460/3/60	460/3/60	380/3/60	380/3/60
Motor FLC amps: Full/Half Speed	5.8	6.03/2.26	5.94	5.2/2.13	6.17	7.64/2.89
Motor SC amps: DOL Full/Half Speed	30.16	30.2/7.23	30.4	36.9/7.03	33.9	39/10.1
Speed RPM: Half/Full Speed	1435	1435/715	1720	1720/860	1720	1720/860
Sound dBA @1m: Full/Half Speed	85	85/68	88	88/71	88	88/71
Material Finish*	Galv Steel	Galv Steel	Galv Steel	Galv Steel	Galv Steel	Galv Steel

*Other finishes available upon request

BESPOKE IMPULSE FAN CONFIGURATION

This range is composed of our high temperature axial fans in a Bespoke Impulse Fan Configuration (BIFC).

The key benefits of this range are the virtually limitless choice of thrust values available, as well as many other configurable options to suit each project.

Nuaire's axial fan configurator software includes a thrust calculator that enables selection of impulse fans from 10N up to 1300N thrust, and everything in between. Fans can alternatively be selected to achieve a specific airflow.

There is a large variety of parameters available enabling the customer to fix diameter/kW and add paint finish or a higher efficiency motor. Fans are available with smoke rating F300 or F400.

Ancillaries, such as silencers and guards, are included to mimic an impulse fan (site assembly required).

The BIFC range is typically used to meet thrust parameters, that are not available within our standard jet fan range. Contact Nuaire for additional details.

HIGH TEMPERATURE AXIAL RANGE

HIGH TEMPERATURE AXIAL (AX), SMOKE CONTRA AXIAL (AXC), SMOKE RUN AND STANDBY AXIAL (AXT)

Nuaire has a comprehensive range of high performance axial fans from **250mm to 2000mm** diameter that will suit every application, ensuring maximum efficiency and saving costly energy. The range has a **duty range of up to 120 m³/s.**

KEY BENEFITS:

- **EN12101-3:2002** – INDEPENDENTLY TESTED
- INTEGRAL CASE MOUNTED GUIDE VANES
- CONFIGURABLE SOLUTION AVAILABLE IN LARGE RANGE OF SIZES AND DUTY POINTS
- AIR PERFORMANCE IN ACCORDANCE TO ISO 5801
- TESTED IN ACCORDANCE WITH AMCA 300 AND ISO 13347

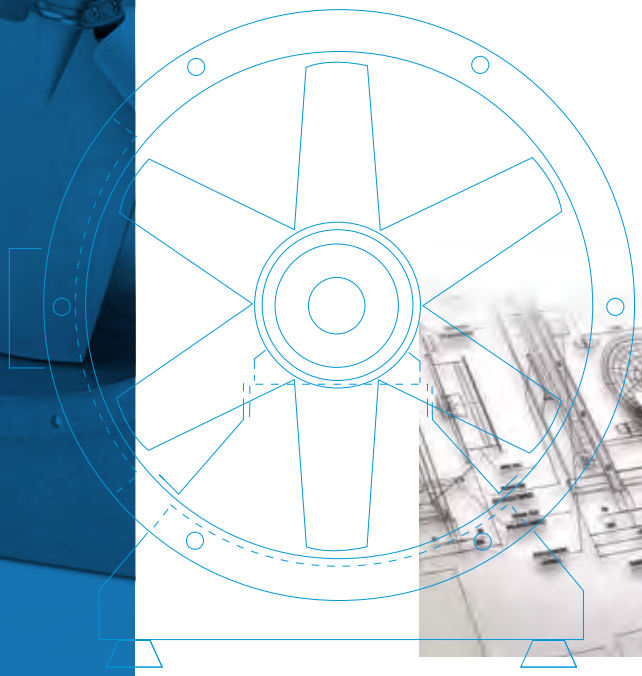

UK MADE

50Hz 60Hz 300°C/400°C

CONSULTANTS SPECIFICATION

CASING

The complete units are manufactured from pre-galvanised mild steel to BS EN10142 as standard. Hot dip galvanised steel and paint finishes are available. Optional integral case mounted guide vanes for optimised efficiency and reduced operating costs.

MOTOR

Motors are direct drive TENV/TEAO class H insulated and are prewired to an external terminal box fitted with a weatherproof flexible conduit to IP55. Motors are available as single speed or 2 speed; 2, 4, 6, or 8 pole and up to IE3 efficiency. Motor bearings are sealed for life up to 132 frames and re-greaseable for 160 frame and above.

CERTIFICATION AND OPERATING TEMPERATURE

Units are tested to BS EN12101-3, suitable for standard day to day temperatures of up to 60°C and for one off operation at either 300°C for two hours or 400°C for two hours.

IMPELLER

Aluminium (300°C/2) and steel (400°C/2) aerofoil impellers available.

INSTALLATION

The units are suitable for internal or external installation at any angle.

PERFORMANCE

The units are available in a variety of airflows up to 120m³/s and up to 2000mm diameter.

ANCILLARIES

Each unit is available with a range of ancillaries including:

- Mounting brackets
- Matching flanges
- Flexible connections
- Anti-vibration mounts
- All necessary components for ease of installation.

All additional ancillaries are certified to BS EN12101-3.

HIGH TEMPERATURE AXIAL (AX) - SINGLE STAGE

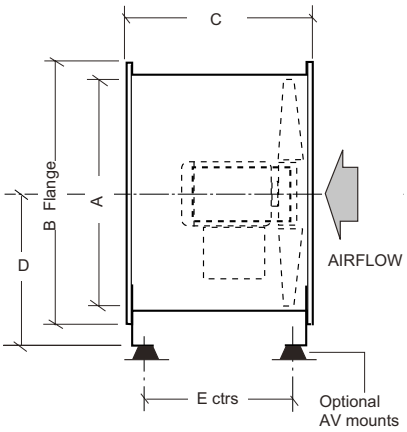

CODING AXC100X-XX

AX	100	X	-	X	X
1	2	3		4	5

SAMPLE CODING

1. Axial fan
2. Size of casing in CM
3. Impeller specification reference
4. Motor speed in poles
5. Operating temperature reference

Contact Nuaire for Fan Selector to help in selecting the right unit for your project.

DIMENSIONS (MM)

MODEL	A	B	C	D
AX31	315	400	365	210
AX35	350	430	380	240
AX40	400	490	440	270
AX45	450	540	450	300
AX45	450	540	600	300
AX50	500	608	465	340
AX50	500	608	615	340
AX56	560	670	440	370
AX56	560	670	615	370
AX63	630	740	480	430
AX63	630	740	600	430
AX63	630	740	800	430
AX71	710	814	455	470
AX71	710	814	700	470
AX80	800	910	440	540
AX80	800	910	840	540
AX90	900	1016	740	600
AX100	1000	1128	740	670
AX100	1000	1128	850	670
AX112	1120	1240	730	750
AX112	1120	1240	865	750
AX112	1120	1240	1010	750
AX125	1250	1365	865	830
AX125	1250	1365	101	830

Unit sizes 1400mm and above contact Nuaire for details.

300

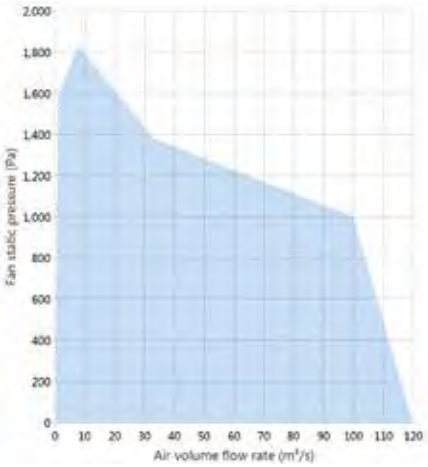

400

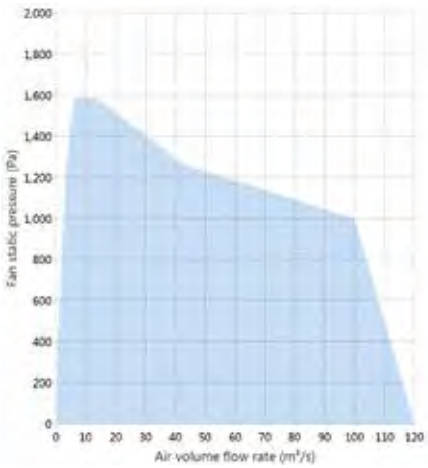

HIGH TEMPERATURE CONTRA AXIAL (AXC) - TWO STAGE

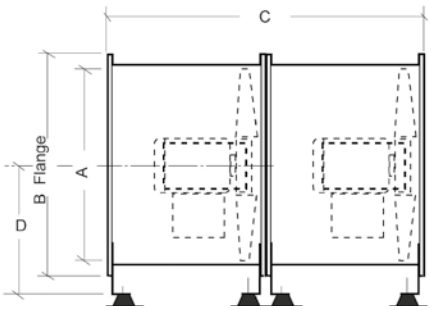

CODING AXC100X-XX

AX	100	X -	X	X
1	2	3	4	5

SAMPLE CODING

1. Contra rotating axial fan
2. Size of casing in CM
3. Impeller specification reference
4. Motor speed in poles
5. Operating temperature reference

Contact Nuaire for Fan Selector to help in selecting the right unit for your project.

DIMENSIONS (MM)

MODEL	A	B	C	D
AXC31	315	400	730	210
AXC35	350	430	760	240
AXC40	400	490	880	270
AXC45	450	540	900	300
AXC50	500	608	930	340
AXC50	500	608	1230	340
AXC56	560	670	880	370
AXC56	560	670	1230	370
AXC63	630	740	960	430
AXC63	630	740	1200	430
AXC71	710	814	910	470
AXC71	710	814	1400	470
AXC80	800	910	880	540
AXC80	800	910	1680	540
AXC90	900	1016	1480	600
AXC100	1000	1128	1480	670
AXC100	1000	1128	1700	670
AXC112	1120	1240	1460	750
AXC112	1120	1240	1730	750
AXC112	1120	1240	2020	750
AXC125	1250	1365	1730	830
AXC125	1250	1365	2020	830

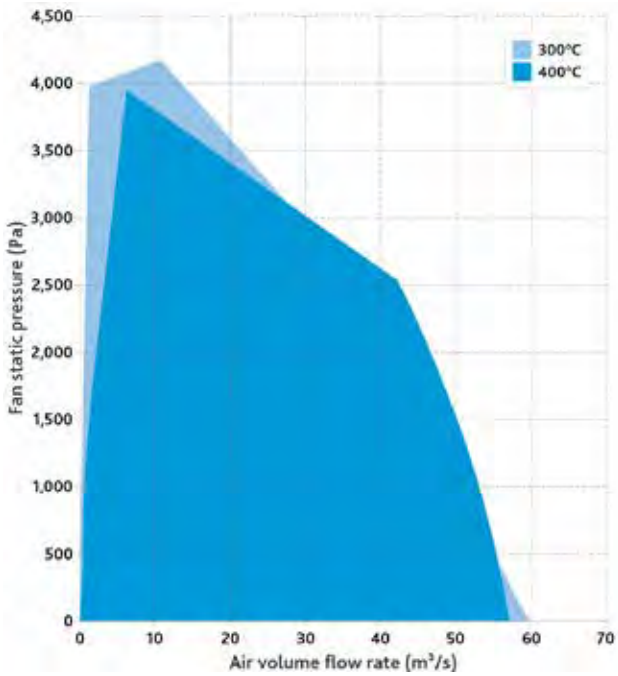

For unit sizes 1400mm and above contact Nuaire for details.

HIGH TEMPERATURE AXIAL RUN AND STANDBY (AXT) - TWO STAGE

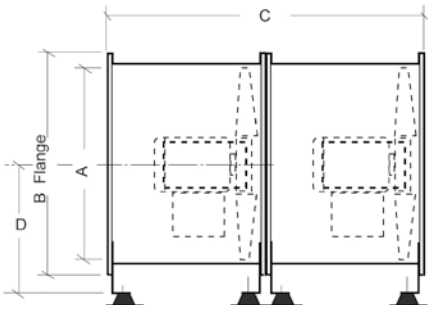

CODING AXC100X-XX

AX	100	X -	X	X
1	2	3	4	5

SAMPLE CODING

1. Run and standby axial fan
2. Size of casing in CM
3. Impeller specification reference
4. Motor speed in poles
5. Operating temperature reference

Contact Nuaire for Fan Selector to help in selecting the right unit for your project.

DIMENSIONS (MM)

MODEL	A	B	C	D
AXT31	315	400	730	210
AXT35	350	430	760	240
AXT40	400	490	880	270
AXT45	450	540	900	300
AXT50	500	608	930	340
AXT50	500	608	1230	340
AXT56	560	670	880	370
AXT56	560	670	1230	370
AXT63	630	740	960	430
AXT63	630	740	1200	430
AXT71	710	814	910	470
AXT71	710	814	1400	470
AXT80	800	910	880	540
AXT80	800	910	1680	540
AXT90	900	1016	1480	600
AXT100	1000	1128	1480	670
AXT100	1000	1128	1700	670
AXT112	1120	1240	1460	750
AXT112	1120	1240	1730	750
AXT112	1120	1240	2020	750
AXT125	1250	1365	1730	830
AXT125	1250	1365	2020	830

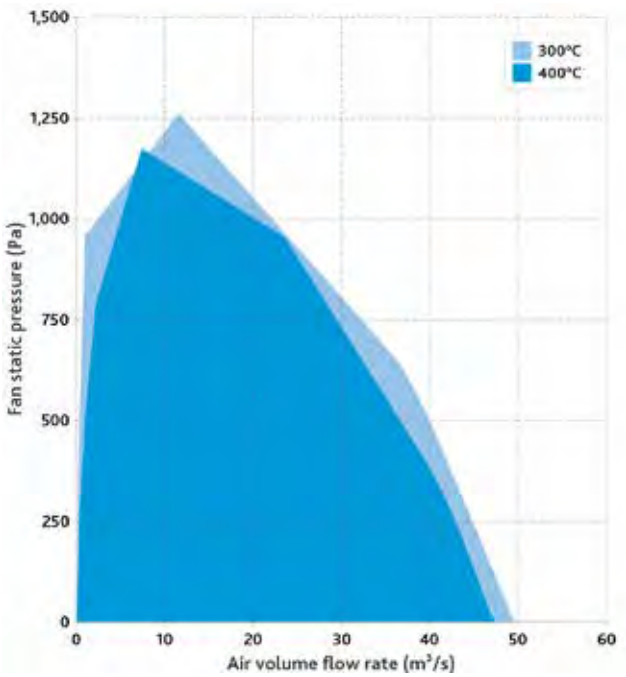

For unit sizes 1400mm and above contact Nuaire for details.

ARC - AXUS ROOF COWL

The Axus Roof Cowl (ARC) is completely weather proof and suitable for high temperature operations. The casing is manufactured from self finish aluminium alloy, and incorporates air operated shutters. In the closed position, the shutters seal ensuring efficient shedding of rain. The units discharge has a safety mesh designed to safely blow off at high temperatures, held to the unit via a retaining strap. Non rusting fixings are used throughout.

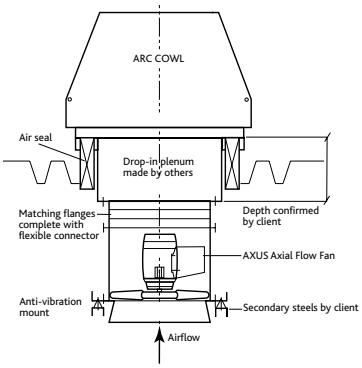

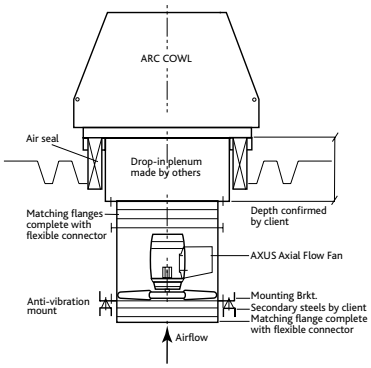

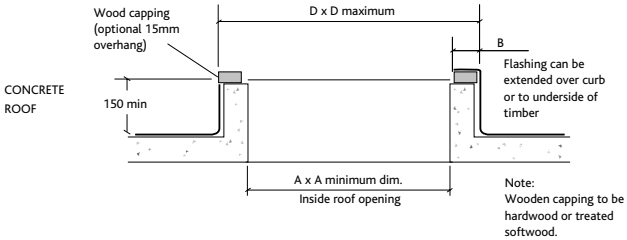

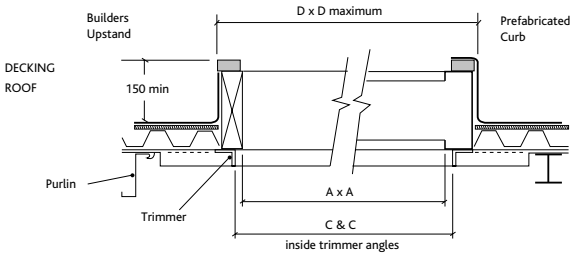

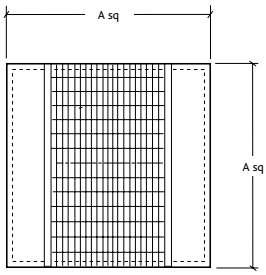

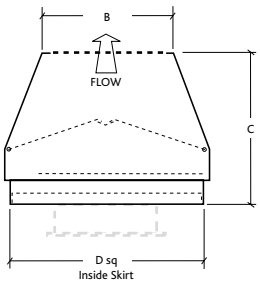

DIMENSIONS(MM) AND WEIGHTS (KGS)

CODE	A	B	C	D	WEIGHT
ARC56	845	570	535	786	22
ARC71	1100	770	760	1045	37
ARC100	1295	1000	880	1234	79
ARC125	1795	1300	1160	1738	213

- Roof cowl suitable for high temperature self finish aluzinc not suitable for 'Atex' hazardous zone applications
- Roof cowl high temperature self finish aluzinc

Nuaire offer a variety of roof cowls, for more information contact Nuaire.

AXUS ANCILLARIES

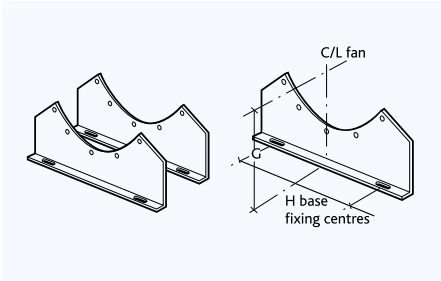

MOUNTING BRACKETS

The AXUS mounting brackets are manufactured from heavy gauge galvanised steel and are supplied in pairs. For dimensional information, please contact Nuaire.

Typical Code - CMB100 (100- Fan diameter in cm).

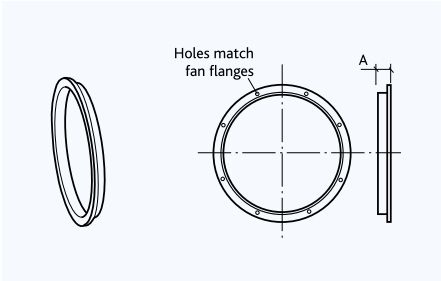

MATCHING FLANGE (SINGLE)

Manufactured from galvanised steel. Matching flanges are supplied individually. For dimensional information, please contact Nuaire.

Typical Code: CMF100 (100 = fan diameter in cm).

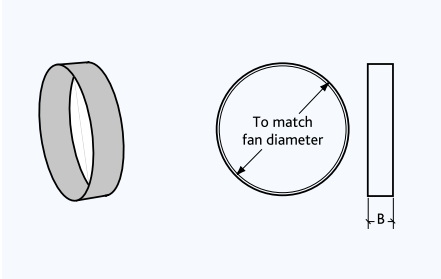

FLEXIBLE CONNECTOR (SINGLE)

Circular without flanges. Flexible duct material is flameproof and resistant to heat up to 132°C/400°C, chemicals, ozone, oil and grease. The material is airtight, waterproof and tested to BS476 Part 7. (Supplied complete with fixing straps). For dimensional information, please contact Nuaire.

Typical Code: CFC100 (100 = fan diameter in cm) - 132°C.
CFCH100 (100 = fan diameter in cm) - 400°C.

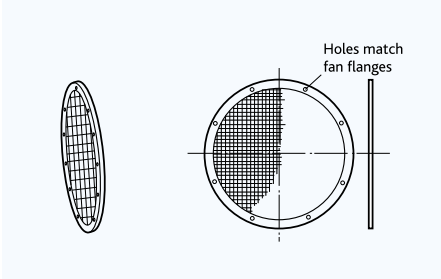

GUARD

Manufactured from heavy gauge galvanised steel and acid zinc plated steel mesh. Standard Accessory Losses (k). Flat type • Finger guard 0.4.
For dimensional information, please contact Nuaire.

Typical Code: CGD100 (100 = fan diameter in cm).
Pressure Drop (Pa) = 0.6 x k x Velocity (m/s).

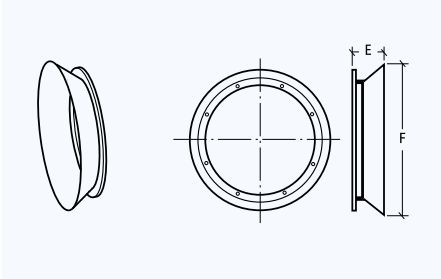

INLET CONE

Manufactured in heavy gauge galvanised steel with a single bolted flange. Standard Accessory Losses (k). Low loss • inlet cone 0.38.
For dimensional information, please contact Nuaire.

Typical Code: CIC100 (100 = fan diameter in cm).
Pressure Drop (Pa) = 0.6 x k x Velocity (m/s).

AXUS ANCILLARIES

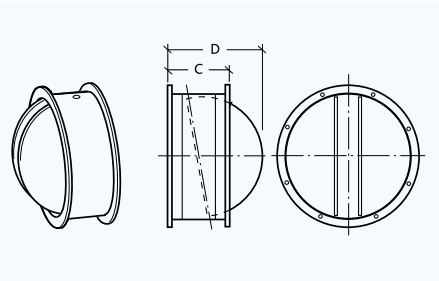

BACKDRAFT DAMPER (SINGLE)

Gravity operated backdraught damper, manufactured from heavy gauge galvanised steel with a pair of bolted flanges. Standard Accessory Losses (k) (Air stream operated) 0.4. For dimensional information, please contact Nuaire.

Typical Code: CBD100 (100 = fan diameter in cm) - 132°C.
(For horizontal mounting only).
Pressure Drop (Pa) = 0.6 x k x Velocity (m/s).

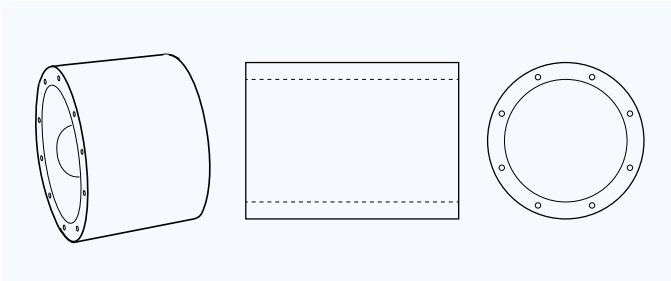

ATTENUATOR

Standard (non podded), long (non podded), podded, and long podded options available. For dimensional information, please contact Nuaire.

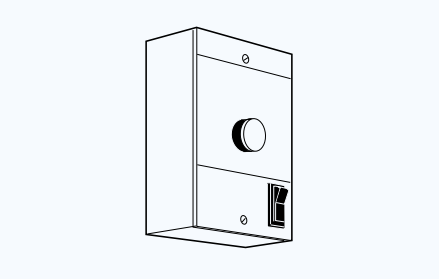

CONTROLS

Choice of inverter, electronic or transformer speed controls available. For dimensional information, please contact Nuaire.

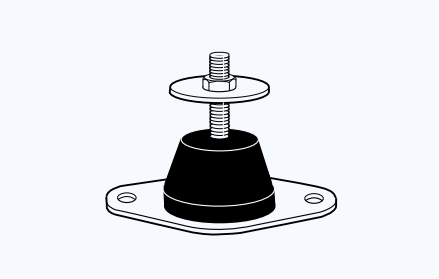

ANTI-VIBRATION MOUNTS

Resilient rubber, for fan only. Spring options also available.
For dimensional information, please contact Nuaire.

Typical code: NAV1/A.

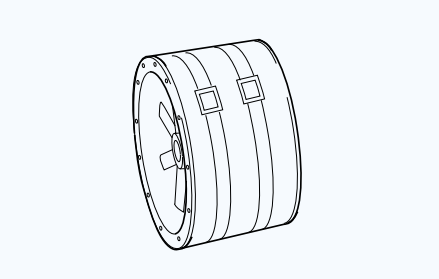

ACOUSTIC JACKET

Acoustic material laminated with 25mm foam.
Complete with straps/buckles for security.

CENTRIFUGAL INLINE HIGH TEMPERATURE SQUIF - SINGLE FAN SQF AND SQF-T (TWO SPEED)

High temperature centrifugal fans for smoke extract (outside smoke reservoir applications) and certified to EN12101-3. The SQUIF is an ideal solution for applications of high resistances with a duty performance range of 6.5m³/s.

KEY BENEFITS:

- **HIGH TEMPERATURE APPLICATION -** CAPABLE OF RUNNING CONTINUOUSLY AT 90°C, AND FOR A ONE OFF EMERGENCY USE AT 400°C/2 HOURS
- **QUIET OPERATION -** ONE OF THE QUIETEST SOLUTIONS FOR MOTOR UNIT OUT OF AIRSTREAM
- **EASY MAINTENANCE -** OUT OF AIRSTREAM ALLOWS FOR QUICK AND EASY ACCESS
- **CLASS F MOTOR**
- **SUITABLE FOR HIGH RESISTANCES -** HIGH PRESSURE DEVELOPMENT SUITABLE FOR DUCTED SOLUTIONS
- **FLEXIBLE SOLUTION -** CAN BE MOUNTED INTERNAL OR EXTERNALLY EITHER HORIZONTALLY OR VERTICALLY

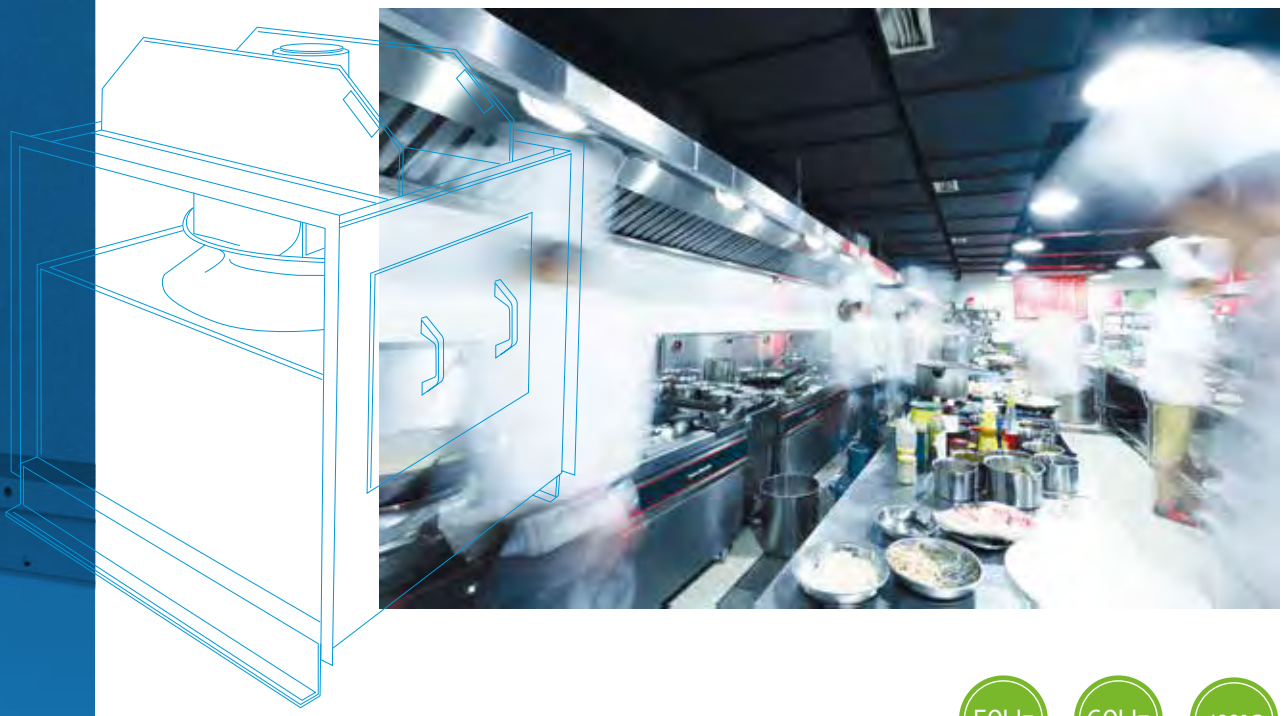

50Hz 60Hz 400°C

CONSULTANTS SPECIFICATION

CASING

The complete units are manufactured from heavy gauge galvanised steel and are designed for easy maintenance and fitted with an integral flange (additional finishes are available). General construction is to a Class A Leakage.

MOTOR

Motors are direct drive mounted out of airstream class F insulated and IE2 high efficiency. Motors are available as single speed or 2 speed; 4 or 6 pole. Motor bearings are sealed for life.

CERTIFICATION AND OPERATING TEMPERATURE

Units are independently tested to BS EN12101-3, suitable for standard day to day temperatures of up to 90°C and for one off operation at 400°C for two hours.

IMPELLER

The impeller is a high efficiency backwards curved centrifugal design manufactured from galvanised steel.

INSTALLATION

The units are designed for internal or external installation at any angle.

PERFORMANCE

The units are available in a variety of airflows up to 6.5m³/s with high pressure development.

NOISE

Units are designed for quiet operation with low in-duct and breakout sound levels.

ANCILLARIES

Each unit is available with a range of ancillaries for ease of installation. All ancillaries are certified to BS EN12101-3.

- Splitter attentuators
- AV mounts
- Flexible connectors
- Built-in feet
- Guards for square units.

APPLICATIONS

- Car parks
- Factories and warehouses
- Supermarkets
- Commercial kitchens
- Student accommodation
- Care homes
- Leisure and sports facilities
- Public buildings.

CENTRIFUGAL INLINE HIGH TEMPERATURE SQF AND SQF-T (TWO SPEED)

CODING SQF41-3

SQF	4	1	-	3
1	2	3		4

SQF41-3

1 - SQF - Squif range/
SQF-T - Two speed Squif range
2 - Pole (4/6)
3 - Curve number
4 - Phase (1 or 3)
5 - G- 460v, J- 380v

Squif - 4 pole

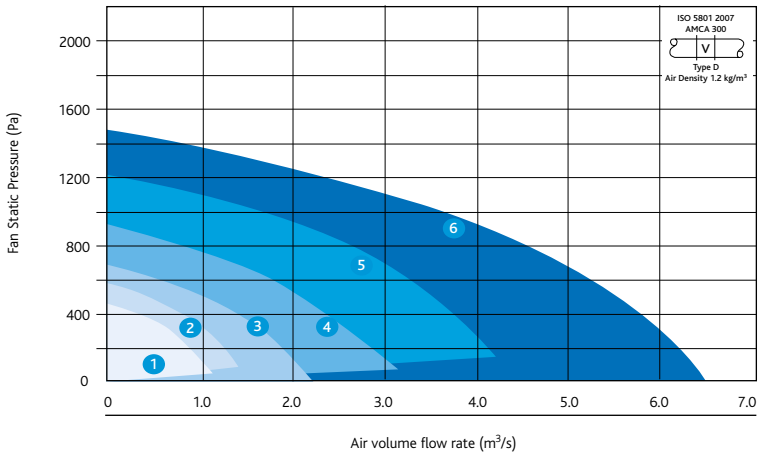

Squif - 6 pole

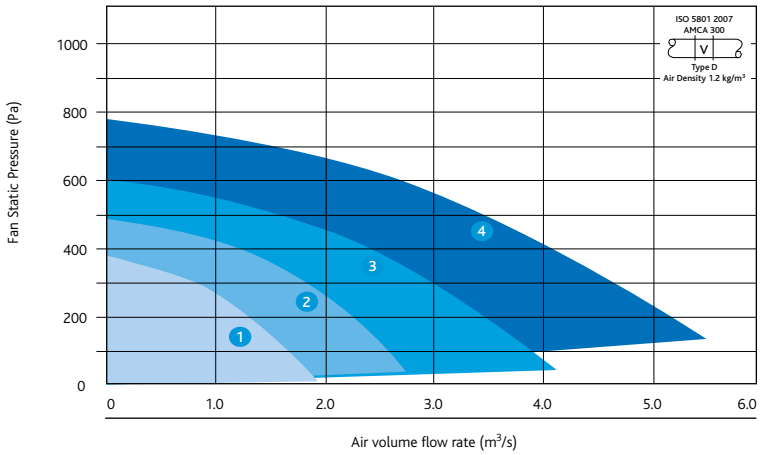

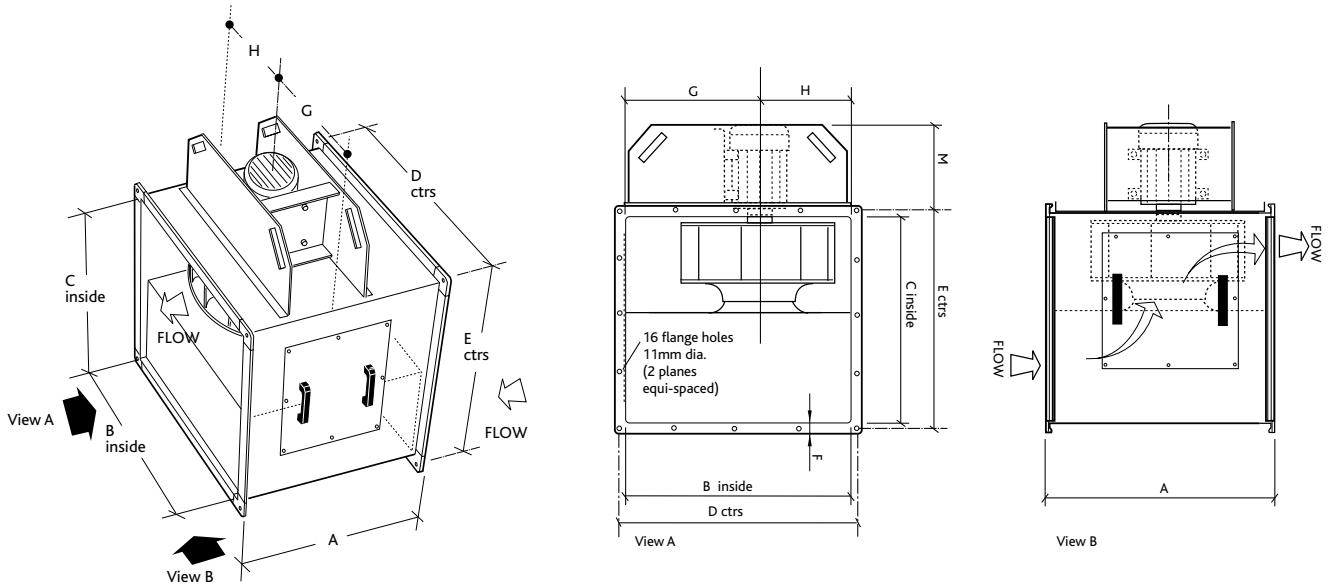

DIMENSIONS (MM) AND WEIGHT (KG)

MODEL	A	B	C	D	E	F	G	H	M	WEIGHT
SQF41-3	634	500	500	532	532	26.5	273	227	193	52
SQF41-1	634	500	500	532	532	26.5	273	227	193	52
SQF42-3	692	700	600	730	630	32	382	318	215	60
SQF43-3	750	750	650	780	680	32	412	338	231	70
SQF43-1	750	750	650	780	680	32	412	338	231	70
SQF44	820	800	700	830	730	32	440	360	290	100
SQF61	820	800	700	830	730	32	440	360	290	100
SQF45	901	900	800	930	830	32	490	410	290	150
SQF62	901	900	800	930	830	32	490	410	290	150
SQF46	994	1000	900	1030	930	32	546	454	387	255
SQF63	994	1000	900	1030	930	32	546	454	387	255
SQF64	1114	1100	1000	1030	1030	32	600	500	387	315

CENTRIFUGAL INLINE HIGH TEMPERATURE SQF AND SQF-T - TWO SPEED

50Hz

50Hz - 400

			MOTOR CURRENTS		SOUND POWER LEVELS RE 1 PWATT (Hz) INDUCT INLET								BREAKOUT NOISE
CODE	PHASE	RPM	FLC	SC	63	125	250	500	1K	2K	4K	8K	dB(A) @3M
SQF41-3	3	1450	0.8	5.2	87	90	79	70	70	70	69	62	60
SQF41-1	1	1410	2.8	11.2	87	90	79	70	70	70	69	62	50
SQF42-3	3	1450	0.98	9.04	85	92	82	77	74	76	75	67	53
SQF43-3	3	1450	1.44	12	89	95	83	79	77	78	78	71	56
SQF43-1	1	1420	7	35	89	95	83	79	77	78	78	71	56
SQF44	3	1450	4.6	28.8	83	93	89	82	77	80	80	71	58
SQF45	3	1450	9.1	59	89	99	87	85	85	84	83	81	61
SQF46	3	1450	15.2	108	89	103	92	86	86	85	86	83	63
SQF61	3	960	2.1	8.82	81	89	84	75	70	73	73	64	48
SQF62	3	960	3	13.2	87	96	83	78	76	75	74	72	56
SQF63	3	960	5.9	28.9	87	100	87	79	76	76	77	73	59
SQF64	3	960	9.4	61.2	88	103	91	82	79	77	77	74	62

60Hz

60Hz - J-380

			MOTOR CURRENTS		SOUND POWER LEVELS RE 1 PWATT (Hz) INDUCT INLET								BREAKOUT NOISE
CODE	PHASE	RPM	FLC	SC	63	125	250	500	1K	2K	4K	8K	dB(A) @3M
SQF41-3J	3	1700	2.4	10.8	91	94	83	74	74	74	73	66	54
SQF42-3J	3	1720	3.7	20	89	96	86	81	78	80	79	71	53
SQF61J	3	1100	4.7	21	85	93	88	79	74	77	77	68	47
SQF62J	3	1100	3	13.2	91	100	87	82	80	79	78	76	56
SQF63J	3	1160	10.6	63	91	104	91	83	80	80	81	77	59

60Hz - G460

			MOTOR CURRENTS		SOUND POWER LEVELS RE 1 PWATT (Hz) INDUCT INLET								BREAKOUT NOISE
CODE	PHASE	RPM	FLC	SC	63	125	250	500	1K	2K	4K	8K	dB(A) @3M
SQF41-3G	3	1700	2.4	10.8	91	94	83	74	74	74	73	66	54
SQF42-3G	3	1720	3.7	20	89	96	86	81	78	80	79	71	53
SQF61G	3	1100	4.7	21	85	93	88	79	74	77	77	68	47
SQF62G	3	1100	3	13.2	91	100	87	82	80	79	78	76	56
SQF63G	3	1160	10.6	63	91	104	91	83	80	80	81	77	59

TWIN CENTRIFUGAL LINE HIGH TEMPERATURE (SQFT)

High pressure, volume and temperature centrifugal extract fan range where the motor is out of the airstream. The twin fan option, run and standby, ensures long life and guaranteed ventilation.

KEY BENEFITS:

- **QUIET AND POWERFUL SOLUTIONS**
- **OUT OF AIRSTREAM MOTORS -** IDEAL FOR DIRTY EXTRACT AND GREASY ENVIRONMENTS
- **HIGH TEMPERATURE APPLICATION -** CAPABLE OF RUNNING CONTINUOUSLY AT 90°C, AND A ONE OFF EMERGENCY USE OF 400°C/2
- **HIGH RESISTANT -** HIGH EFFICIENCY CENTRIFUGAL IMPELLERS PROVIDE HIGH PRESSURE DEVELOPMENT SUITABLE FOR DUCTED SYSTEMS
- **FLEXIBLE SOLUTION -** CAN BE MOUNTED INTERNALLY OR EXTERNALLY AND EITHER VERTICALLY OR HORIZONTALLY

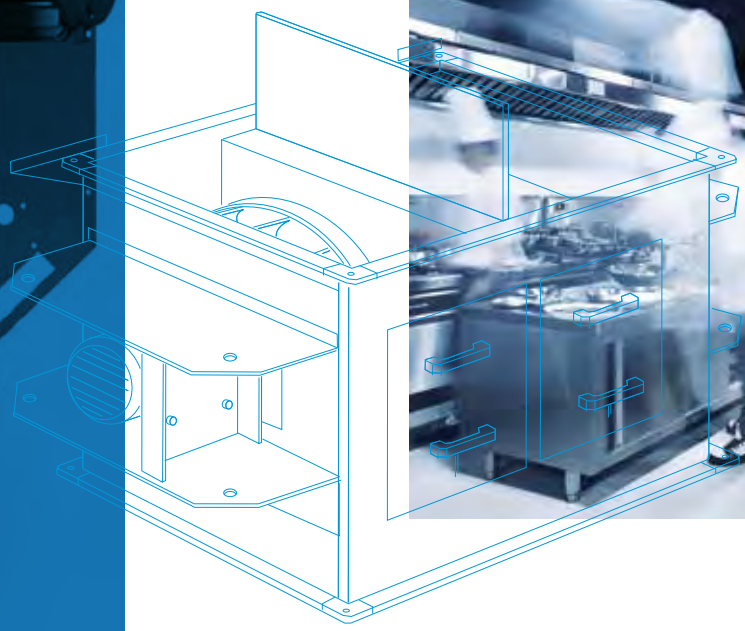

50Hz 60Hz 300°C/ 400°C

CONSULTANTS SPECIFICATION

CASING

Heavy gauge galvanised steel with integral back draught shutters operated in conjunction with the running fan. The units are designed for easy maintenance (additional finishes are available). General construction is to a Class A Leakage. Case is fitted with an integral flange.

MOTOR

Motors are direct drive mounted out of airstream Class F insulated and IE2 high efficiency. Motors are available as single speed; 4 or 6 pole. Motor bearings are sealed for life. Units are designed as run and standby fan assemblies with a built in backdraught damper and failure detection.

CERTIFICATION AND OPERATING TEMPERATURE

Units are independently tested to BS EN12101-3, suitable for standard day to day temperatures of up to 90°C and for one off operation at 400°C for two hours (when located outside the smoke envelope).

IMPELLER

The impeller is a high efficiency backwards curved centrifugal design manufactured from galvanised steel.

INSTALLATION

The units are designed for internal or external installation.

PERFORMANCE

The units are available in a variety of airflows up to 6.0m³/s with high pressure development.

NOISE

Units are designed for quiet operation with low in-duct and breakout sound levels.

ANCILLARIES

Each unit is available with a range of ancillaries for ease of installation. All ancillaries are certified to BS EN12101-3.

- Splitter attenuator
- AV mounts
- Flexible connectors
- Weatherproof coils, guards.

APPLICATIONS

- Car parks
- Factories and warehouses
- Commercial kitchens
- Student accommodation
- Care homes
- Leisure and sports facilities
- Public buildings.

TWIN CENTRIFUGAL LINE HIGH TEMPERATURE (SQFT)

CODING SQFT41-3

SQFT	4	1	-	3
1	2	3		4

SQFT41-3

1 - SQFT - High temperature Twin Squif
2 - Pole (4 or 6)
3 - Curve number
4 - Phase (1 or 3)
5 - Ecosmart

Twin Squif - 4 pole

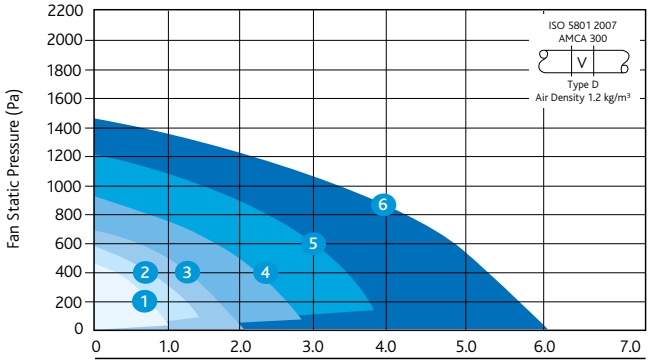

Twin Squif - 6 pole

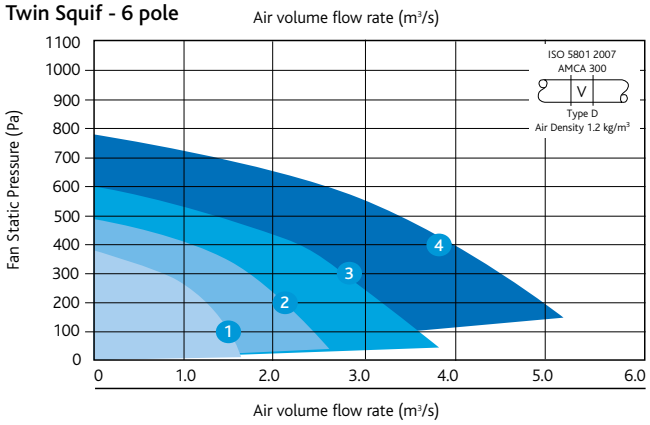

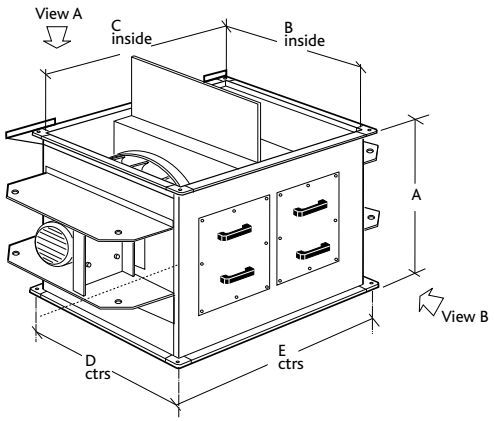

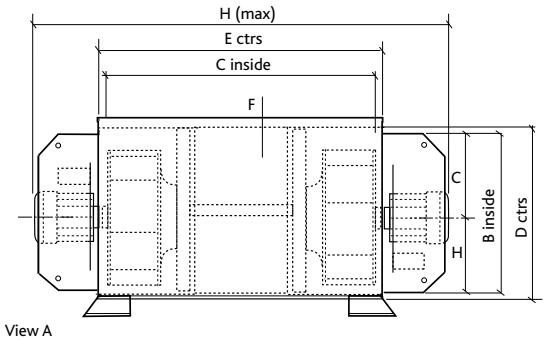

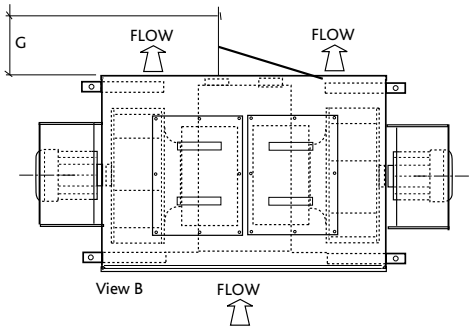

DIMENSIONS (MM) AND WEIGHT (KG)

MODEL	A	B	C	D	E	F	G	H	MOTOR KW	WEIGHT
SQFT41-3	634	500	710	529	741	26.5	223.5	1110	0.37	52
SQFT41-1	634	500	710	529	741	26.5	223.5	1110	0.37	52
SQFT41-3ES	634	500	710	529	741	26.5	223.5	1110	0.37	80
SQFT42-3	692	700	780	730	811	32	248	1220	0.75	77
SQFT42-3ES	692	700	780	730	811	32	248	1220	0.75	77
SQFT43-3	750	750	882	780	913	32	278	1382	1.1	102
SQFT43-1	750	750	882	780	913	32	278	1382	1.1	102
SQFT43-3ES	750	750	882	780	913	32	278	1382	1.1	102
SQFT44	820	800	970	830	1001	32	303	1550	2.2	100
SQFT61	820	800	970	830	1001	32	303	1550	0.75	111
SQFT44ES	820	800	970	830	1001	32	303	1550	2.2	100
SQFT61ES	820	800	970	830	1001	32	303	1550	0.75	111
SQFT45	901	900	1075	930	1106.5	32	333	1655	4.0	150
SQFT62	901	900	1075	930	1106.5	32	333	1655	1.1	141
SQFT45ES	901	900	1075	930	1106.5	32	333	1655	4.0	150
SQFT62ES	901	900	1075	930	1106.5	32	333	2070	1.1	141
SQFT46	994	1000	1230	1030	1261	32	383	2070	7.5	315
SQFT63	994	1000	1230	1030	1261	32	383	2070	2.2	180
SQFT46ES	994	1000	1230	1030	1261	32	383	2070	7.5	315
SQFT63ES	994	1000	1230	1030	1261	32	383	2070	2.2	180
SQFT64	1114	1100	1380	1130	1411	32	433	2220	4.0	580
SQFT64ES	1114	1100	1380	1130	1411	32	433	2220	4.0	580

TWIN CENTRIFUGAL LINE HIGH TEMPERATURE (SQFT)

50Hz

50Hz - 400

			MOTOR CURRENTS		SOUND POWER LEVELS RE 1 PWATT (Hz) INDUCT INLET								BREAKOUT NOISE
CODE	PHASE	RPM	FLC	SC	63	125	250	500	1K	2K	4K	8K	dB(A) @3M
SQFT41-1	1	1410	2.8	11.2	90	93	79	70	70	70	69	62	52
SQFT41-3	3	1450	1.06	5.2	90	93	79	70	70	70	69	62	52
SQFT42-3	3	1450	1.7	9.04	88	95	82	77	74	76	75	67	55
SQFT43-1	1	1420	7	35	92	98	83	79	77	78	78	71	57
SQFT43-3	3	1450	2.5	12	92	98	83	79	77	78	78	71	57
SQFT44	3	1450	4.6	28.8	86	96	89	82	77	80	80	71	58
SQFT45	3	1450	9.1	59	92	102	87	85	85	84	83	81	63
SQFT46	3	1450	15.2	108	92	106	92	86	86	85	86	83	64
SQFT61	3	960	2.1	8.82	84	92	84	75	70	73	73	64	48
SQFT62	3	960	3	13.2	90	99	83	78	76	75	74	72	57
SQFT63	3	960	5.9	28.9	90	103	87	79	76	76	77	73	61
SQFT64	3	960	9.4	61.2	91	106	91	82	79	77	77	74	64

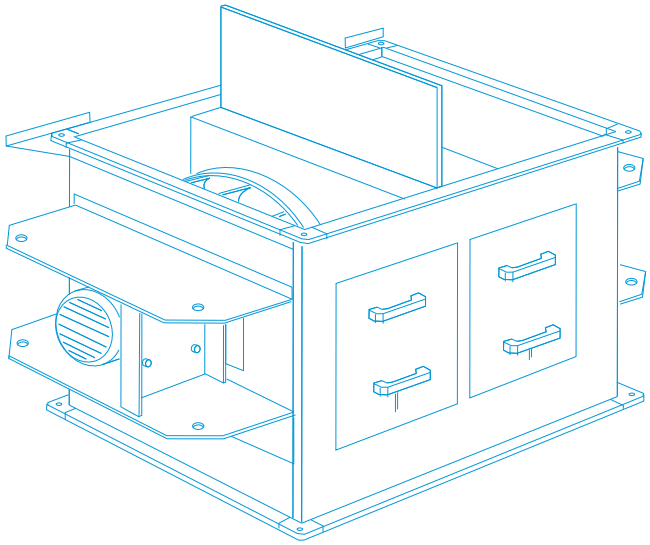

60Hz

60Hz - J-380

			MOTOR CURRENTS		SOUND POWER LEVELS RE 1 PWATT (Hz) INDUCT INLET								BREAKOUT NOISE
CODE	PHASE	RPM	FLC	SC	63	125	250	500	1K	2K	4K	8K	dB(A) @3M
SQFT41-3J	3	1700	2.4	10.8	94	97	83	74	74	74	73	66	56
SQFT42-3J	3	1720	3.7	20	92	99	86	81	78	80	79	71	55
SQFT61J	3	1100	4.7	21	88	96	88	79	74	77	77	68	48
SQFT62J	3	1100	3	13.2	94	103	87	82	80	79	78	76	58
SQFT63J	3	1160	10.6	63	94	107	91	83	80	80	81	77	61

60Hz - G460

			MOTOR CURRENTS		SOUND POWER LEVELS RE 1 PWATT (Hz) INDUCT INLET								BREAKOUT NOISE
CODE	PHASE	RPM	FLC	SC	63	125	250	500	1K	2K	4K	8K	dB(A) @3M
SQFT41-3G	3	1700	2.4	10.8	94	97	83	74	74	74	73	66	56
SQFT42-3G	3	1720	3.7	20	92	99	86	81	78	80	79	71	55
SQFT61G	3	1100	4.7	21	88	96	88	79	74	77	77	68	48
SQFT62G	3	1100	3	13.2	94	103	87	82	80	79	78	76	58
SQFT63G	3	1160	10.6	63	94	107	91	83	80	80	81	77	61

Notes

Notes

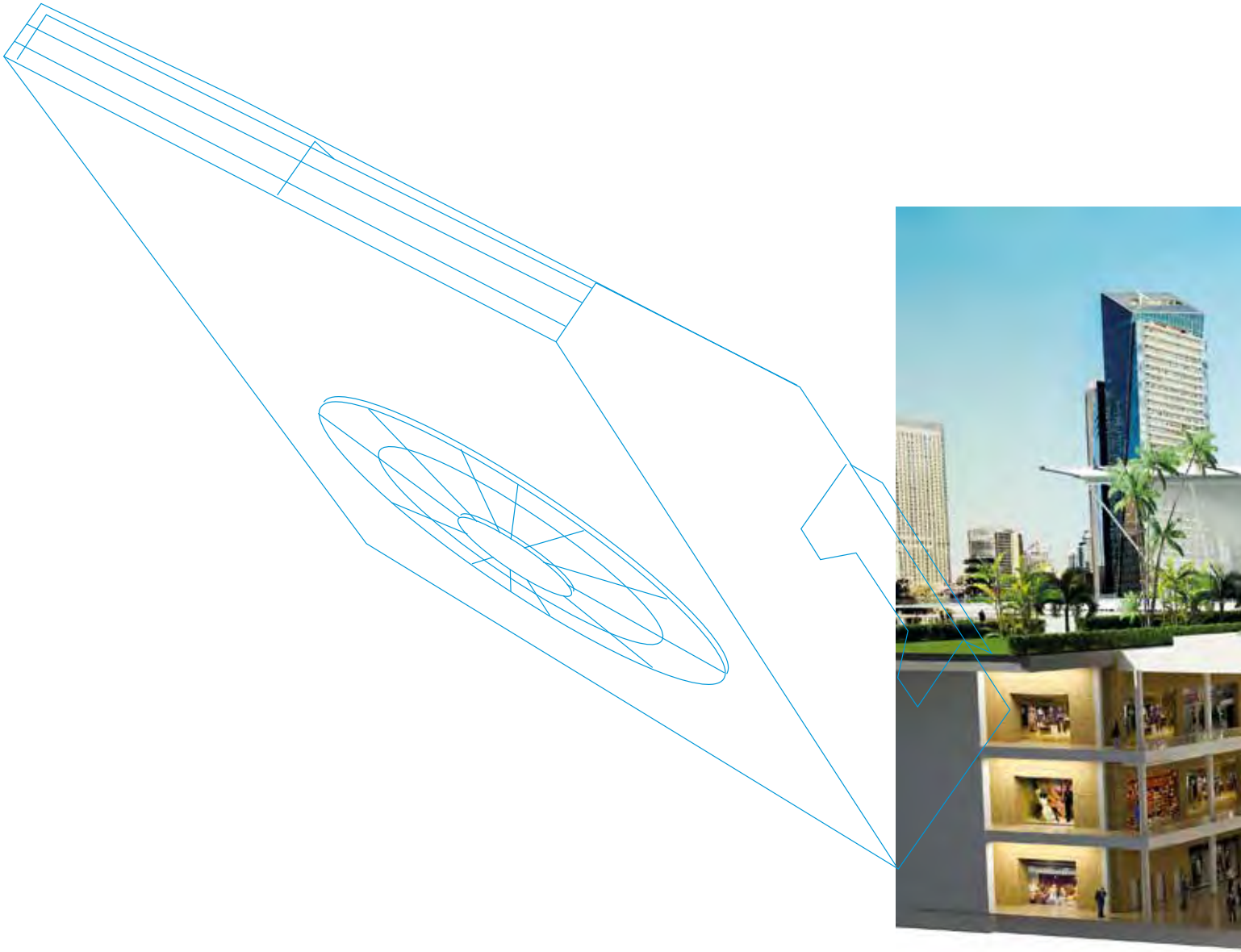

NUAIRE. FOR THE COMPLETE VENTILATION SOLUTION

T +44(0)29 2085 8484 E INTERNATIONAL@NUAIRE.CO.UK W NUAIREGROUP.COM @NUAIREGROUP

UK MADE