MRXBOX95-LOFT

Whole House Heat Recovery Solutions

Nuaire's new range of XBOX95 heat recovery systems offer high efficiency in a compact, loft designed unit.

This concept provides optimised balanced (supply & extract) mechanical ventilation with heat recovery. Tempered air is delivered into 'living' areas whilst extracting moisture laden air from 'wet' areas, creating comfortable well ventilated homes.

Ultra Efficient Ventilation

Using the latest generation of low watt DC fans and motors, counter flow heat exchanger combined with easy accessible controls.

The system will quietly and efficiently provide the dwelling with fresh filtered air all year round, creating a healthier living environment.

SAP APPENDIX Q • ELIGIBLE •

Helping you meet Code for Sustainable Homes level 3 or above

SAP Appendix Q Guide

Application	Specific Fan Power(W/l/s)	Heat Exchange Efficiency	Energy Saving Trust Best Practice Performance Compliant
Kitchen + 1 Wet Room	0.69	92%	Yes
Kitchen + 2 Wet Rooms	0.76	92%	Yes
Kitchen + 3 Wet Rooms	0.85	90%	Yes

CARBON TRUST STANDARD

REDUCING CO2 YEAR ON YEAR

Why **MRXBOX95** is ideal

for you:

- Code 3 or above through SAP Q eligible products
- Part F Building regulations compliant
- Compact, lightweight and simple to install
- Free of charge code advisory service – taking the stress out of specifying
- Full installation service – let us take care of it
- 5 year filters, low and easy maintenance – less hassle
- 5 year warranty – peace of mind
- Constant quiet running fans – ensure occupant acceptability
- No need for trickle vents – a cost saving and tenant acceptability

for your tenants/occupants:

- Improves indoor air quality creating a healthier environment
- Prevents condensation by keeping moisture levels low
- Significant energy savings with very low running costs
- Fit and forget for trouble free use
- Compact size means more space within the loft
- No trickle vents – overcomes draught issues and the need to open and close vents
- No need to open windows for added security
- Simple 'user guides' supplied

Optional low voltage sensors/detectors:

Allows you to customise unit for enhanced performance.

MRXBOX95-PIR

Detects movement and activates system. Incorporates overrun timer and timer adjustments.

MRXBOX95-HUM

Activates the system when the relative humidity level is above set point. Incorporates overrun timer and relative humidity setpoint level adjustment.

MRXBOX95-RFI

When fan failure occurs the audio visual indicator will flash a warning.

Summer bypass – MRXBOX95B-LOFT

A loft unit with summer bypass is also available.

This unit continuously monitors the inside and outside temperature. The bypass facility will automatically shut down the heat exchanger to ensure the cooler outdoor air is delivered into the home to create background cooling, during the warmer months.

Dimensions

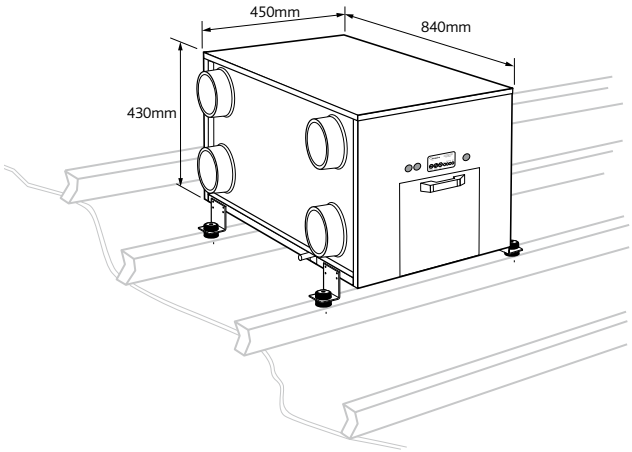

For more information please contact:

Nuaire
Western Industrial Estate
Caerphilly CF83 1NA
United Kingdom

SAP APPENDIX Q nuaire ELIGIBLE

5 YEAR nuaire MAINTENANCE FREE

Nuaire tel: 029 2085 8200
or visit www.nuaire.co.uk/residential