AIRE-VOLVE TWIN EXTRACT FANS

CONTENTS

3	ABOUT EXTRACT FANS
4	ABOUT AIRE-VOLVE
5	ECOSMART CONTROL PLATFORM
6	ECOSMART CLASSIC
8	TWIN EXTRACT TECHNICAL INFORMATION
16	SILENCER SYSTEMS TECHNICAL INFORMATION
24	CONSTANT PRESSURE TECHNICAL INFORMATION
32	TWIN EXTRACT CONSULTANT SPECIFICATION
33	CONSTANT PRESSURE CONSULTANT SPECIFICATION

PROUD TO BUILD BRITISH

We've been pioneers in new air technology since 1966. Our heritage is in the design and manufacture of fans and ventilation systems. We put our energy into efficient ventilation so you don't waste yours.

Pioneering
We lead the way in product innovation with a stream of ground-breaking products over decades.

Trusted
We have a reputation for our build quality. We establish long term relationships and are always transparent with our test data.

Agile
We're one of the UK's leading manufacturers, covering both residential and commercial air quality. We offer innovative advice and provide flexible solutions.

Expert
Our team is made up of over 600 people, 50 of which have over 25 years' experience. We have the skills and knowledge to help find the best solution for our customers.

Attentive
We're expert listeners, rising to any challenge and going the extra mile for our customers. We add value by solving problems. We sell solutions, not fans.

Personal
We work closely with our customers and can provide bespoke solutions to meet their specific project needs. Many of our product ranges were developed this way.

> "Our expertise, experience and innovation is what makes us stand out from the rest of the market."
>
> **Nuaire**

For help with selecting a unit, speak to us on 02920 858200 or email: enquiries@nuaire.co.uk

ABOUT EXTRACT FANS

For over 50 years, Nuaire has been known for its extract fans. Brands such as Squif, Opus, Genie, and Squrbo are iconic names in the ventilation market.

Since then, we have expanded and progressed, utilising industry-leading technologies to ensure the highest quality of fans on the market. Advancement in controls and fan technology have made single and twin extract fans high performance and high efficiency solutions for many project applications.

Choice of fan can depend on a number of factors, including; project type, application, duty requirements and typical occupancy rates. Our comprehensive range makes selection simpler, with a wide range of solutions available.

ABOUT AIRE-VOLVE

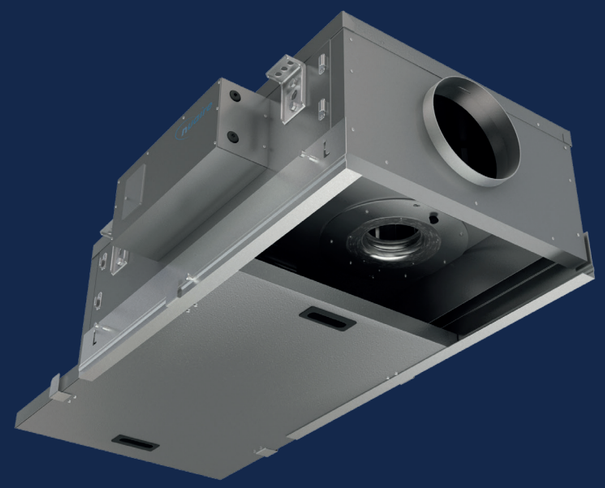

Aire-Volve Twin (AVT) is a range of extract fans with superior market-leading efficiencies and acoustic properties.

Units are double-skinned for the lowest possible noise levels, making them ideal for projects with strict acoustic requirements. Due to their extremely low depth, units are suited to ceiling void application, however, due to Nuaire's patented fan design, units can be mounted in any orientation, providing complete design and installation flexibility.

AVT is the market leader in quiet, efficient single fan solutions.

CODING AVT1

AV T 1
1 2 3

SAMPLE CODING
1. Aire-Volve range
2. Twin fan
3. Case size 1–9

COMPACT DESIGN Most compact size by duty on the market, ideal for ceiling void applications.

WIDE RANGE Available in duties up to 1.9m³/s and with a full range of matching ancillaries.

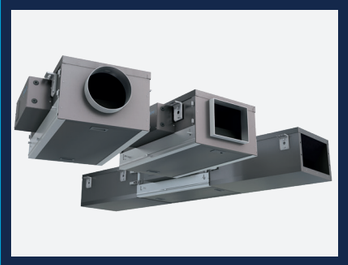

FLEXIBLE ACCESS Units are both top or bottom access as standard with sliding panel for simple maintenance.

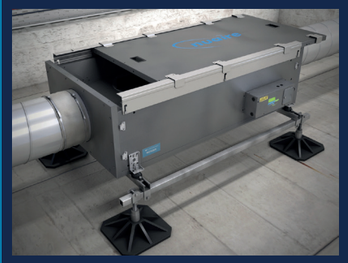

HIGH EFFICIENCY Latest EC motor technology guarantees longer life and lower SFPs.

PEACE OF MIND
5 year warranty as standard.

ECOSMART CONTROL PLATFORM IT'S SO SMART IT'S SIMPLE

Nuaire and ventilation controls have history.

Back in the early 1970s it was standard practice to specify fans as close to the design duty as possible, but without any speed controllers. Understanding the inefficiency this can cause, Nuaire, headed by our then owner and CIBSE Chairman, Brian Moss, developed the first twin fan controller – a cost-effective way to save energy and reduce running costs. Since then, the Nuaire brand has become synonymous with energy-saving controls.

Demand Ventilation Solutions
Below is a conventional ventilation system compared to one using Ecosmart controls.

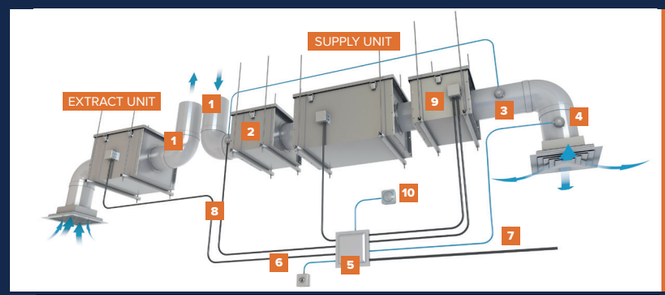

CONVENTIONAL
SUPPLY & EXTRACT VENTILATION SYSTEM

1. PVC ducting
2. Filter
3. Air pressure switch
4. Temperature switch
5. Control panel
6. User control
7. 230V Electricity supply
8. Electrical cabling 230V
9. Electrical heater
10. Time clock

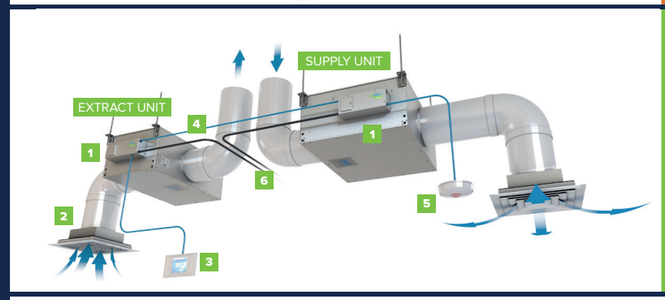

ECOSMART
SUPPLY & EXTRACT VENTILATION SYSTEM

1. Integrated control
2. Optional CO_2 sensor
3. User control
4. (SELV) 12V cable
5. Optional PIR sensor
6. 230V Electricity supply

An Ecosmart system combines systems into a simple package, saving space but also time spent installing and commissioning. Alternatively, we offer 'Basic Control' – a simple terminal box for supply and extract fan motor wiring for interfacing to custom-built control panels (by others).

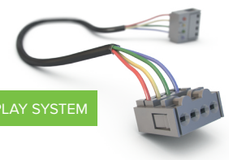

SIMPLE PLUG-AND-PLAY SYSTEM

Our range of control options means there is a solution for all requirements, no matter how simple or complicated.

ABOUT ECOSMART CLASSIC

The UK's leading energy-efficient plug-and-play solution. Demand ventilation at your fingertips.

Varying the ventilation rate in a building to suit changing occupant levels used to be an expensive option – Ecosmart brings this within everyone's pocket. Minimising energy losses through re-heating (or cooling) the air replaced through ventilation is at the top of the agenda; building regulations make this a necessity. Ecosmart not only saves energy and carbon emissions it prolongs the life of the heat recovery unit.

Choosing Ecosmart is your reliable option, used by design engineers for many years and is now an integral feature of most Nuaire fans.

- **Saves time on site** - Ecosmart controls are all pre-assembled, configured and installed directly into the heat recovery units, this includes valves and actuators, pipework etc. which helps significantly reduce the time spent on site.
- **Simpler system** - No need for VCD (directly on the fan) no wasted energy or noise generation because air volume can be precisely set via integrated speed control.
- **Simple & precise commissioning** - As recommended in Part L, Ecosmart enables the system to be accurately commissioned via integrated speed control. If the unit is controlled by 0-10V BMS the system's response to a 0-10V dc BMS signal is given in the table above.

	Ventilation mode	Cooling mode*	Heating mode*
Local control	0.00	-	-
OFF / trickle	0.25	-	-
Speed 1	0.50	0.75	1.00
Speed 2	1.50	1.75	2.00
Speed 3	2.50	2.75	3.00
Speed 4	3.50	3.75	4.00
Speed 5	4.50	4.75	5.00
Speed 6	5.50	5.75	6.00
Speed 7	6.50	6.75	7.00
Speed 8	7.50	7.75	8.00
Speed 9	8.50	8.75	9.00
Speed 10	9.50	9.75	10.00

*Only available on relevant unit.

SENSORS & ENABLERS All Ecosmart Classic Systems must include at least one enabler.

(N.B. when used, BMS control and time clocks take over all other enablers).

ES-PIR2 (Enabler)
Detects movement and activates system. Incorporates a system status LED, overrun timer and timer adjustment.

ES-THERMOSTAT2 (Enabler)
Activates the system when the temperature is above set point. Incorporates two system status LEDs. (Green = OK, Red = Failure) and temperature set point level adjustment.

ES-AVI2 (Enabler)
When fan failure occurs the AVI will flash a warning. Supplied with pre-plugged 10m length of communication cable.

ES-HUMIDISTAT2 (Enabler)
Activates the system when the RH level is above set point. Incorporates two system status LEDs. (Green = OK, Red = Failure) and RH set point level adjustment.

ES-CO2RM (Sensor) ES-CO2RMPP (Sensor)
Surface mounted room carbon dioxide (CO_2) sensors incorporate a temperature sensor. RM = SELV option, RMPP complete with SELV AC powers supply.

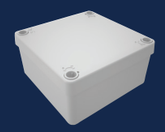

ES-HTCSIG (Enabler)
Signal conditioning circuit for humidity, temperature and CO_2 sensors.

ES-TEMP2 TEMPERATURE (Sensor)
Modulate fan speed based on room temperature. Incorporates two system status LEDs. (Green = OK, Red = Failure) and temperature set point level adjustment.

ES-RH2 RELATIVE HUMIDITY (Sensor)
Modulate fan speed based on RH level. Incorporates two system status LEDs. (Green = OK, Red = Failure) and RH set point level adjustment.

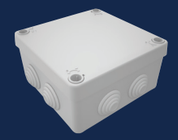

ES-CI SEMI-AUTOMATIC USER CONTROL
Fan, heating & cooling selected by external volt free switch, speed selected by 0-10V signal.

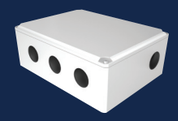

ES-JB JUNCTION BOX
Designed to be compatible with Ecosmart System this unit is supplied with a pre-plugged 10 metre length of communications cable and has 8 further ports.

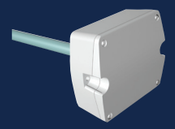

ES-CO2 (Sensor)
Duct mounted sensor to modulate fan speed based on CO_2 levels. Connect to fan directly. Pre-wired with 2m cable (not adjustable).

SWITCHED LIVE (by others)
Any mains voltage signal connected to the switched live terminal (S/L) in the unit. This affects the connected fan only.

TOUCH SCREENS & MANUAL USER CONTROLS

ES-LCD (Enabler)
Touch screen user control in white with time clock facility. Control the function of the fan by manual setting or using a set of timed programs.

ES-UCF Manual 'on' and 'off' system user/speed control.
Incorporates two system status LEDs (Green = OK, Red = Failure).

AIRE-VOLVE TWIN EXTRACT FANS

PERFORMANCE & TECHNICAL INFORMATION

CODING AVT1

AV T 1
| | |
1 2 3

SAMPLE CODING

1. Aire-Volve range
2. Twin fan
3. Case size 1–9

PERFORMANCE CHART

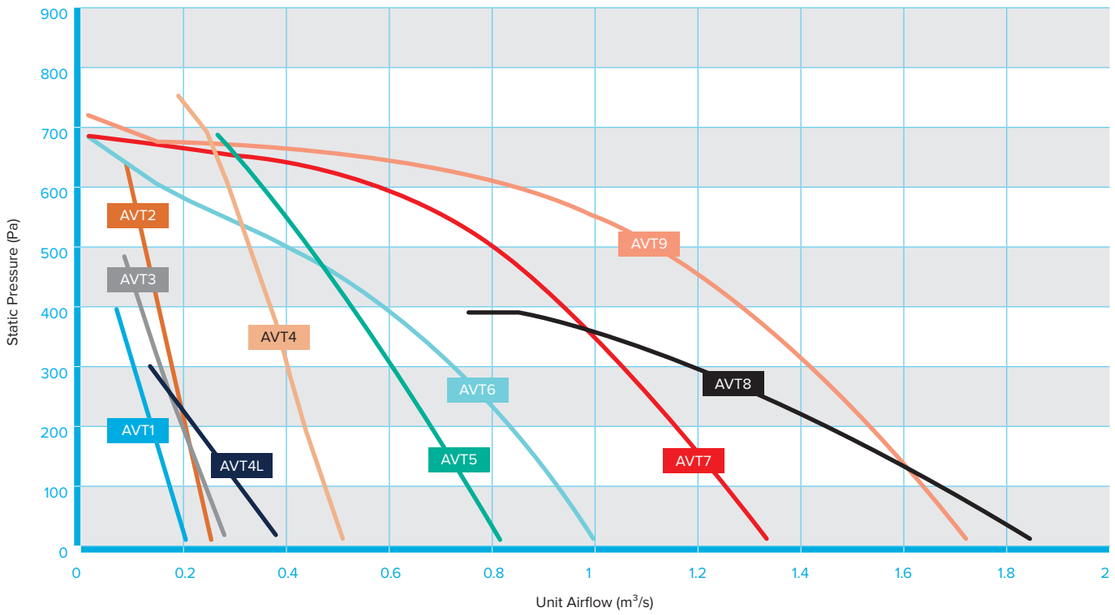

ELECTRICAL AND SOUND

1. Unweighted induct inlet octave band Sound Power level - dB re 1pW
2. Unweighted induct outlet octave band Sound Power level - dB re 1pW
3. Casing radiated octave band Sound Power level - dB re 1pW

CODE	DUCT CONN.	SUPPLY (V/Freq Hz/Phase)	FLC (amps)	SC (amps)	INPUT POWER (Max) (W)	FAN SPEED (Nominal)		FREQUENCY (Hz)								*CASING RADIATED FREE FIELD dBA @ 3m (Spherical Radiation)
								63	125	250	500	1K	2K	4K	8K	
AVT1	200	230/50/1	0.75	0.75	85	3300	1	73	69	63	63	60	56	52	50	20
							2	75	71	63	63	63	59	53	51	
							3	61	53	43	34	25	21	23	17	
AVT2	200	230/50/1	1.4	1.4	170	4000	1	79	75	69	69	66	62	58	56	26
							2	81	77	69	69	69	65	59	57	
							3	67	59	49	40	31	27	29	23	
AVT3	250	230/50/1	1.35	1.35	170	2500	1	77	74	79	67	63	59	53	51	31
							2	81	77	78	74	69	68	58	58	
							3	67	59	58	45	31	30	28	24	
AVT4	315	230/50/1	3.3	3.1	500	3400	1	83	79	80	82	78	74	70	67	36
							2	87	83	80	84	83	80	75	68	
							3	73	65	60	55	45	42	45	34	
AVT4L	315	230/50/1	1.35	1.1	160	1700	1	72	67	67	66	60	57	53	48	29
							2	74	69	69	70	69	62	58	52	
							3	66	57	55	45	37	30	32	22	
AVT5	315	230/50/1	2.2	3.5	550	2400	1	74	71	69	68	62	61	57	52	25
							2	76	73	71	72	71	66	62	56	
							3	62	55	51	43	33	28	32	22	
AVT6	400	230/50/1	2.2	2.9	450	1700	1	77	80	74	72	66	65	61	54	30
							2	80	82	74	73	67	66	63	56	
							3	66	64	54	44	29	28	33	22	
AVT7	400	230/50/1	3.3	3.5	790	1700	1	78	76	73	73	67	65	62	57	29
							2	81	77	74	75	74	71	67	61	
							3	67	59	54	46	36	33	37	27	
AVT8	500	230/50/1	3.2	3.2	710	1100	1	74	76	71	66	62	64	60	54	27
							2	76	78	73	71	71	69	64	57	
							3	62	60	53	42	33	31	34	23	
AVT9	500	400/50/3	1.5	1.85	1000	1500	1	79	77	76	73	66	66	66	58	32
							2	81	78	79	78	76	72	70	61	
							3	67	60	59	49	38	34	40	27	

*Break out fan only: These figures are available at 1m dBA, please contact Nuaire.

AIRE-VOLVE TWIN EXTRACT FANS

PERFORMANCE & TECHNICAL INFORMATION

CODING AVT2-R

AV T 2 R
1 2 3 4

SAMPLE CODING

1. Aire-Volve range
2. Twin fan
3. Case size 1–9
4. Grille outlet external unit

PERFORMANCE CHART

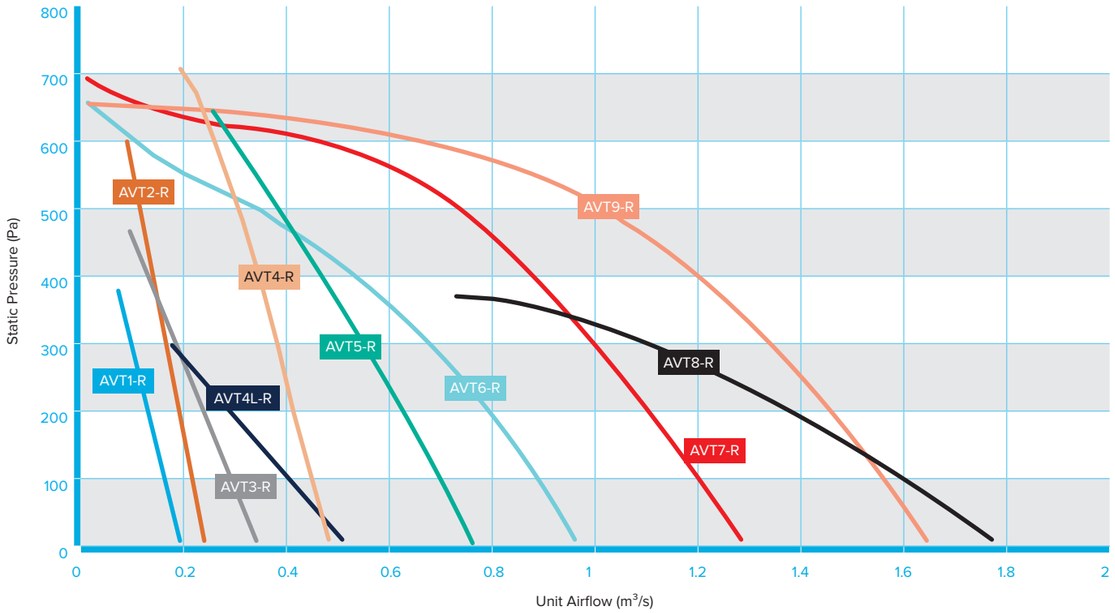

ELECTRICAL AND SOUND

1. Unweighted induct inlet octave band Sound Power level - dB re 1pW
2. Unweighted induct outlet octave band Sound Power level - dB re 1pW

CODE	DUCT CONN.	SUPPLY (V/Freq Hz/Phase)	FLC (amps)	SC (amps)	INPUT POWER (Max) (W)	FAN SPEED (Nominal)		FREQUENCY (Hz) 63	125	250	500	1K	2K	4K	8K	*OUTLET RADIATED FREE FIELD dBA @ 3m (Spherical Radiation)
AVT1-R	250	230/50/1	0.75	0.75	85	3300	1	75	69	64	65	61	57	53	51	54
							2	75	70	68	71	71	66	60	56	
AVT2-R	250	230/50/1	1.4	1.4	170	4000	1	81	75	70	71	67	63	59	57	60
							2	81	76	74	77	77	72	66	62	
AVT3-R	250	230/50/1	1.35	1.35	170	2500	1	79	75	81	69	65	60	54	52	59
							2	79	76	85	75	75	69	61	57	
AVT4-R	315	230/50/1	3.3	3.1	500	3400	1	85	80	82	84	80	75	71	68	72
							2	85	81	86	90	90	84	78	73	
AVT4L-R	315	230/50/1	1.35	1.1	160	1700	1	72	67	67	66	60	57	53	48	54
							2	72	68	71	72	70	66	60	53	
AVT5-R	315	230/50/1	2.2	3.5	550	2400	1	76	72	71	70	64	62	58	53	58
							2	76	73	75	76	74	71	65	58	
AVT6-R	400	230/50/1	2.2	2.9	450	1700	1	79	81	76	74	68	66	62	55	62
							2	79	82	80	80	78	75	69	60	
AVT7-R	400	230/50/1	3.3	3.5	790	1700	1	80	77	75	75	69	66	63	58	63
							2	80	78	79	81	79	75	70	63	
AVT8-R	500	230/50/1	3.2	3.2	710	1100	1	76	77	73	68	64	65	61	55	59
							2	76	78	77	74	74	74	68	60	
AVT9-R	500	400/50/1	1.5	1.85	1000	1500	1	81	78	78	75	68	67	67	59	63
							2	81	79	82	81	78	76	74	64	

*Break out fan only: These figures are available at 1m dBA, please contact Nuaire.

AIRE-VOLVE TWIN EXTRACT FANS

PERFORMANCE & TECHNICAL INFORMATION

CODING AVT2-X

AV T 2 X
1 2 3 4

SAMPLE CODING

1. Aire-Volve range
2. Twin fan
3. Case size 1–9
4. Inline external unit

PERFORMANCE CHART

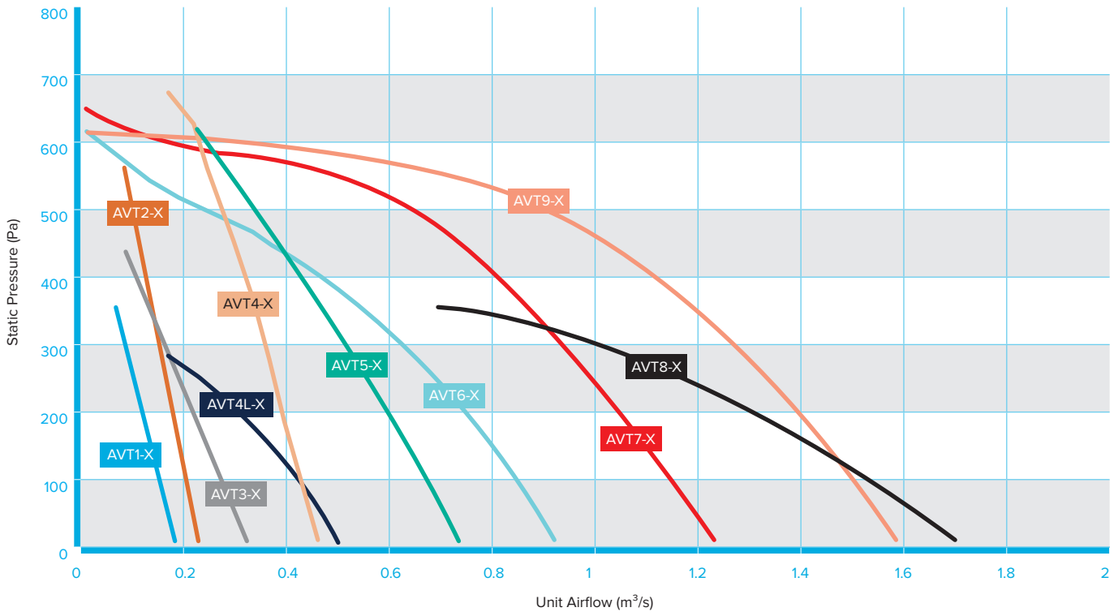

ELECTRICAL AND SOUND

1. Unweighted induct inlet octave band Sound Power level - dB re 1pW
2. Unweighted induct outlet octave band Sound Power level - dB re 1pW
3. Casing radiated octave band Sound Power level - dB re 1pW

CODE	DUCT CONN.	SUPPLY (V/Freq Hz/Phase)	FLC (amps)	SC (amps)	INPUT POWER (Max) (W)	FAN SPEED (Nominal)		FREQUENCY (Hz) 63	125	250	500	1K	2K	4K	8K	*CASING RADIATED FREE FIELD dBA @ 3m (Spherical Radiation)
AVT1-X	200	230/50/1	0.75	0.75	85	3300	1	75	69	64	65	61	57	53	51	25
							2	77	72	65	65	65	60	54	52	
							3	66	57	48	38	30	25	26	20	
AVT2-X	200	230/50/1	1.4	1.4	170	4000	1	81	75	70	71	67	63	59	57	31
							2	83	78	71	71	71	66	60	58	
							3	72	63	54	44	36	31	32	26	
AVT3-X	250	230/50/1	1.35	1.35	170	2500	1	79	75	81	69	65	60	54	52	35
							2	83	78	80	76	71	69	59	59	
							3	72	63	63	49	36	34	31	27	
AVT4-X	315	230/50/1	3.3	3.1	500	3400	1	85	80	82	84	80	75	71	68	41
							2	89	84	82	86	85	81	76	69	
							3	78	69	65	59	50	46	48	37	
AVT4L-X	315	230/50/1	1.35	1.1	160	1700	1	72	67	67	66	60	57	53	48	29
							2	74	69	69	70	69	62	58	52	
							3	66	57	55	45	37	30	32	22	
AVT5-X	315	230/50/1	2.2	3.5	550	2400	1	76	72	71	70	64	62	58	53	30
							2	78	74	73	74	73	67	63	57	
							3	67	59	56	47	38	32	35	25	
AVT6-X	400	230/50/1	2.2	2.9	450	1700	1	79	81	76	74	68	66	62	55	34
							2	82	83	76	75	69	67	64	57	
							3	71	68	59	48	34	32	36	25	
AVT7-X	400	230/50/1	3.3	3.5	790	1700	1	80	77	75	75	69	66	63	58	34
							2	83	78	76	77	76	72	68	62	
							3	72	63	59	50	41	37	40	30	
AVT8-X	500	230/50/1	3.2	3.2	710	1100	1	76	77	73	68	64	65	61	55	32
							2	78	79	75	73	73	70	65	58	
							3	67	64	58	46	38	35	37	26	
AVT9-X	500	400/50/3	1.5	1.85	1000	1500	1	81	78	78	75	68	67	67	59	37
							2	83	79	81	80	78	73	71	62	
							3	72	64	64	53	43	38	43	30	

*Break out fan only

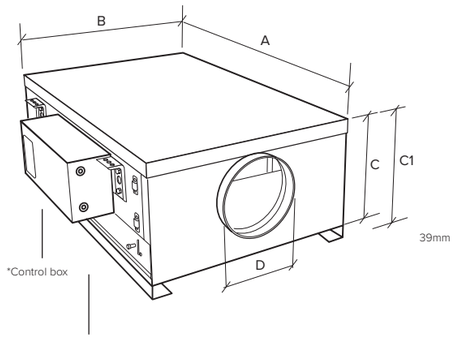

AVT1-9 DIMENSIONS (mm) AND WEIGHT (Kg)

CODE	A	A +SPIGOT LENGTH (inc.100)	B	DIMS B1 +CONTROL (inc.108)	C	C1	SPIGOT D (dia)	WEIGHT (Kg)
AVT1	931	1031	544	652	250	289	200	46
AVT2	968	1068	543	652	285	324	200	48
AVT3	1186	1286	681	789	334	373	250	67
AVT4	1229	1329	681	789	376	415	315	68
AVT4L	1531	1631	827	931	401	440	315	100
AVT5	1531	1631	827	935	433	472	315	102
AVT6	1729	1829	921	1029	545	584	400	153
AVT7	1892	1992	1019	1127	575	614	400	179
AVT8	2238	2338	1244	1352	615	654	500	267
AVT9	2238	2338	1244	1352	615	654	500	244

Bottom access on sizes AVT1-9 as standard. Unit sizes 7-9 have a split bottom access panel. AVT1-9 are available with top access, ie = AVT6TA.

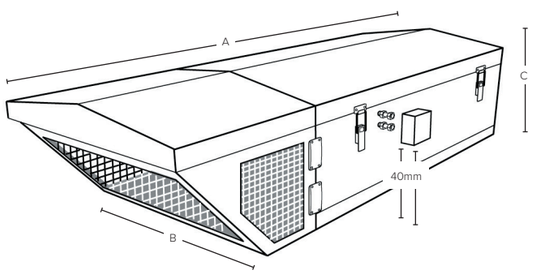

AVT1-9 - R DIMENSIONS (mm) AND WEIGHT (Kg)

CODE	B Width	A Length	C Height	SPIGOT D (dia)	WEIGHT (Kg)
AVT1-R	716	1620	393	250	64
AVT2-R	716	1620	393	250	65
AVT3-R	716	1620	393	250	66
AVT4-R	857	2066	502	315	111
AVT4L-R	857	2066	502	315	110
AVT5-R	857	2066	502	315	115
AVT6-R	1045	2575	656	400	161
AVT7-R	1045	2575	656	400	164
AVT8-R	1278	2956	709	500	262
AVT9-R	1278	2956	709	500	229

Note: Dim 'A' - add 50mm to include spigot.

MATCHED SILENCERS CODES & DIMENSIONS (mm)

CODE	SIZE	SILENCER	L	W	H	H1	WEIGHT
AVT1	Standard	AVT1-MSS	1000	544	250	293	32
	Long	AVT1-MSL	1500	544	250	293	46
AVT2	Standard	AVT2-MSS	1000	543	285	393	32
	Long	AVT2-MSL	1500	543	285	393	46
AVT3	Standard	AVT3-MSS	1000	681	334	393	39
	Long	AVT3-MSL	1500	681	334	383	56
AVT4	Standard	AVT4-MSS	1000	681	376	502	39
	Long	AVT4-MSL	1500	681	376	502	56
AVT4L	Standard	AVT4-MSS	1000	681	376	502	39
	Long	AVT4-MSL	1500	681	376	502	56
AVT5	Standard	AVT5-MSS	1000	857	433	502	44
	Long	AVT5-MSL	1500	857	433	502	65
AVT6	Standard	AVT6-MSS	1000	921	545	656	64
	Long	AVT6-MSL	1500	921	545	656	89
AVT7	Standard	AVT7-MSS	1000	1019	575	656	41
	Long	AVT7-MSL	1500	1019	575	656	98
AVT8	Standard	AVT8-MSS	1000	1244	615	709	83
	Long	AVT8-MSL	1500	1244	615	709	114
AVT9	Standard	AVT9-MSS	1000	1244	615	709	92
	Long	AVT9-MSL	1500	1244	615	709	125

H = AVT Height, H1 = AVT-R + AVT-X Height. (H1 includes pitched roof).

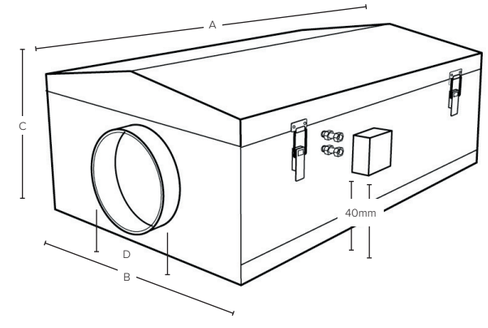

AVT1-9 - X DIMENSIONS (mm) AND WEIGHT (Kg)

CODE	A END PANEL (inc.5mm)	A +SPIGOT LENGTH (inc.50)	B	DIMS B1 +CONTROL (inc.40)	C	SPIGOT D (dia)	WEIGHT (Kg)
AVT1-X	1120	1220	716	756	393	250	56
AVT2-X	1120	1220	716	756	393	250	56
AVT3-X	1120	1220	716	756	393	250	57
AVT4-X	1466	1566	857	897	502	315	99
AVT4L-X	1466	1566	857	897	502	315	99
AVT5-X	1466	1566	857	897	502	315	103
AVT6-X	1831	1931	1045	1085	656	400	145
AVT7-X	1831	1931	1045	1085	656	400	148
AVT8-X	2172	2272	1278	1318	709	500	236
AVT9-X	2172	2272	1278	1318	709	500	205

Note: External silencers have pitched roofs.

QUICK SELECTION GUIDE

SIZE	AV MOUNTS	FLEXIBLE CONNECTOR	ACOUSTIC FLEXIBLE CONNECTOR	VERTICAL SUPPORT BRACKET (4 pack)	END PANEL WITH RECTANGULAR SPIGOT (wxh)	'R' GRILLE OUTLET MODEL (External only)
1	NAV3/A	CFC25	ACFXRD250	AVT-SB4	AVT1-RS	AVT1-R-MOD
2	NAV3/A	CFC25	ACFXRD250	AVT-SB4	AVT2-RS	AVT2-R-MOD
3	NAV3/A	CFC25	ACFXRD250	AVT-SB4	AVT3-RS	AVT3-R-MOD
4	NAV3/A	CFC31	ACFXRD315	AVT-SB4	AVT4-RS	AVT4-R-MOD
5	NAV3/A	CFC31	ACFXRD315	AVT-SB4	AVT5-RS	AVT5-R-MOD
6	NAV3/A	CFC40	ACFXRD400	AVT-SB4	AVT6-RS	AVT6-R-MOD
7	NAV3/A	CFC40	ACFXRD250	AVT-SB4	AVT7-RS	AVT7-R-MOD
8	NAV6/A	CFC50	ACFXRD500	AVT-SB4	AVT8-RS	AVT8-R-MOD
9	NAV6/A	CFC50	ACFXRD500	AVT-SB4	AVT9-RS	AVT9-R-MOD

Note: If isolator is required code is AVT-ISO.

AIRE-VOLVE SILENCER SYSTEMS

PERFORMANCE & TECHNICAL INFORMATION

EXTERNAL ROOF UNIT (AVT4-R)

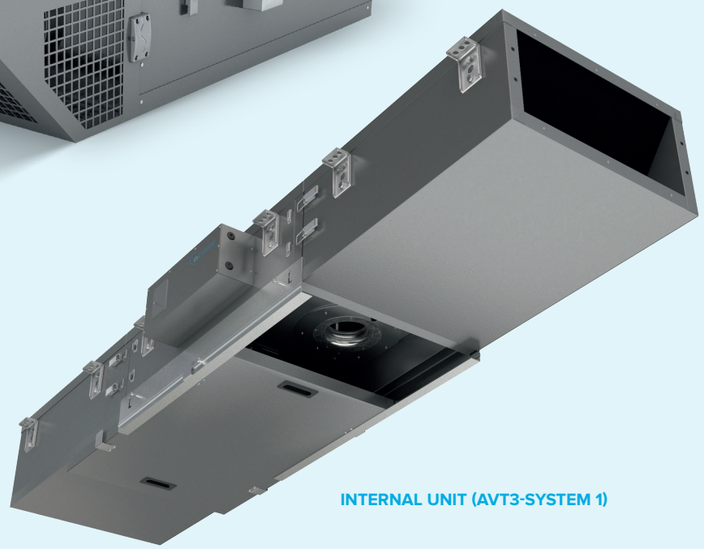

INTERNAL UNIT (AVT3-SYSTEM 1)

FEATURES & BENEFITS

QUIETEST SYSTEM
Construction is double walled with 35mm acoustic infill.

DESIGNED SOLUTION
Matched attenuators acoustically designed to work in conjunction with Aire-Volve twin fans.

COMPLETELY ENCLOSED SPIGOT
Therefore no noise breakout between fan and silencer.

LONG LIFE
Aluzinc provides longer life expectancy than other materials and is aesthetically pleasing for exposed sites.

QUICK & EASY TO INSTALL
Integral mounting brackets allow for attenuators to be easily incorporated into existing drop rod suspension system. Quick fit clamping arrangement and tight seal to fan unit.

FLEXIBLE SOLUTION
Available in 2 lengths (1000mm standard and 1500mm long) with matching flange. Contact Nuaire for details on the 500mm silencers.

PROTECTED SURFACE
Aire-Volve silencers are manufactured from Aluzinc which retains its resistance to corrosion.

QUALITY ASSURANCE
Research designed, tested and manufactured to provide the best system solution.

LOWER PROFILE
Compact attenuators, ideal for restricted ceiling void application.

ANCILLARIES
Optional end panel with rectangular spigot.

WARRANTY
5 year warranty.

CODING AVTCP1-SYS1-X

AVTCP1 - SYS1 - X
1 2 3 4 5 6

SAMPLE CODING
1. Aire-Volve range
2. Twin Fan
3. CP = Constant Pressure control if required
4. Case size 1-9
5. System 1 = Fan unit & 2 standard silencers
   System 2 = Fan unit & 2 long silencers
   System 3 = Fan unit, 1 long & 1 standard silencer
6. X = External system with inline unit
   R = External system with grille outlet unit*

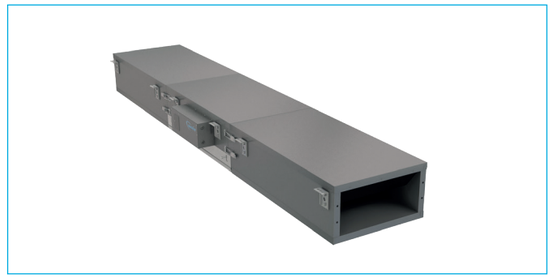

INDIVIDUAL SILENCER

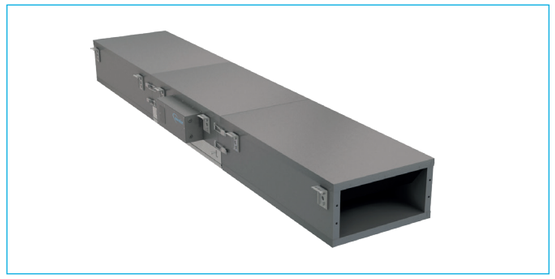

SYSTEM 1

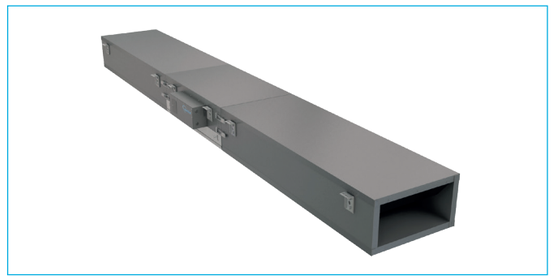

SYSTEM 2

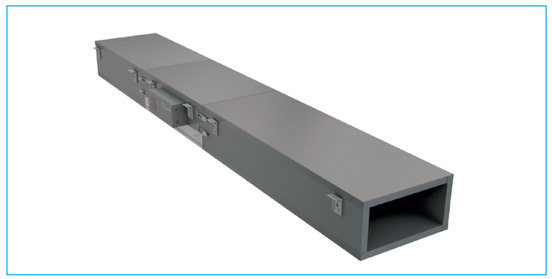

SYSTEM 3

*To discuss systems in detail call Nuaire. Note: All external silencers have a pitched roof.

AIRE-VOLVE SILENCER SYSTEM 1

PERFORMANCE & TECHNICAL INFORMATION

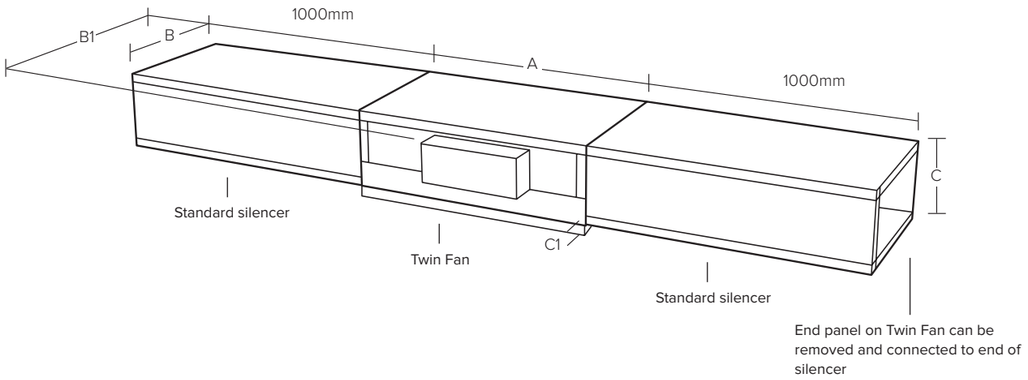

UNIT	CODE	DESCRIPTION	A	B	B1 + CONTROL (108mm)	C	C1 + (39mm)	WEIGHT (Kg)
1	AVT1-SYS1	Size 1 twin fan with 2 standard matched silencers	2931	544	652	250	289	110
2	AVT2-SYS1	Size 2 twin fan with 2 standard matched silencers	2968	543	652	285	324	112
3	AVT3-SYS1	Size 3 twin fan with 2 standard matched silencers	3186	681	789	334	373	145
4	AVT4-SYS1	Size 4 twin fan with 2 standard matched silencers	3229	681	789	376	415	146
5	AVT5-SYS1	Size 5 twin fan with 2 standard matched silencers	3531	827	935	433	472	190
6	AVT6-SYS1	Size 6 twin fan with 2 standard matched silencers	3729	921	1029	545	584	281
7	AVT7-SYS1	Size 7 twin fan with 2 standard matched silencers	3892	1019	1127	575	614	261
8	AVT8-SYS1	Size 8 twin fan with 2 standard matched silencers	4238	1244	1352	615	669	433
9	AVT9-SYS1	Size 9 twin fan with 2 standard matched silencers	4238	1244	1352	615	669	425

The above dimensions and weights are guides only. Contact Nuaire for further details. C1 = maximum depth of unit with access panel lowered. For external systems contact Nuaire.

ELECTRICAL AND SOUND

1. Unweighted induct inlet octave band Sound Power level - dB re 1pW
2. Unweighted induct outlet octave band Sound Power level - dB re 1pW
3. Casing radiated octave band Sound Power level - dB re 1pW

CODE	DUCT CONN.	SUPPLY (V/Freq Hz/Phase)	FLC (amps)	SC (amps)	INPUT POWER (Max) (W)	FAN SPEED (Nominal)		FREQUENCY (Hz) 63	125	250	500	1K	2K	4K	8K	*CASING RADIATED FREE FIELD dBA @ 3m (Spherical Radiation)
AVT1-SYS1	200	230/50/1	0.75	0.75	85	3300	1	70	61	51	43	38	38	34	36	20
							2	72	63	51	43	41	41	35	37	
							3	61	53	43	34	25	21	23	17	
AVT2-SYS1	200	230/50/1	1.4	1.4	170	4000	1	76	67	57	49	44	44	40	43	26
							2	78	69	57	49	47	47	41	44	
							3	67	59	49	40	31	27	29	23	
AVT3-SYS1	250	230/50/1	1.35	1.35	170	2500	1	75	66	67	45	41	35	32	36	31
							2	79	69	67	52	47	44	37	43	
							3	68	59	59	45	31	30	28	24	
AVT4-SYS1	315	230/50/1	3.1	3.1	500	3400	1	80	76	70	62	60	57	54	50	36
							2	83	80	69	63	66	63	58	51	
							3	73	66	60	55	46	43	45	34	
AVT5-SYS1	315	230/50/1	3.5	3.5	550	2400	1	69	64	58	49	41	44	45	40	25
							2	71	66	60	53	50	49	50	44	
							3	62	55	51	43	33	28	32	22	
AVT6-SYS1	400	230/50/1	2.9	2.9	450	1700	1	72	74	61	55	45	49	46	43	30
							2	75	76	61	56	46	50	48	45	
							3	66	64	54	44	29	28	33	22	
AVT7-SYS1	400	230/50/1	3.5	3.5	790	1700	1	74	68	62	54	47	49	48	45	29
							2	77	69	63	56	54	55	53	49	
							3	67	59	54	46	36	33	37	27	
AVT8-SYS1	500	230/50/1	3.2	3.2	710	1100	1	69	69	58	46	41	49	46	42	27
							2	71	71	60	51	50	54	50	45	
							3	62	60	53	42	33	31	34	23	
AVT9-SYS1	500	400/50/3	1.85	1.85	1000	1500	1	74	70	63	54	45	49	51	45	32
							2	76	71	66	59	55	55	55	48	
							3	67	60	59	49	38	34	40	27	

*Break out fan only

AIRE-VOLVE SILENCER SYSTEM 2

PERFORMANCE & TECHNICAL INFORMATION

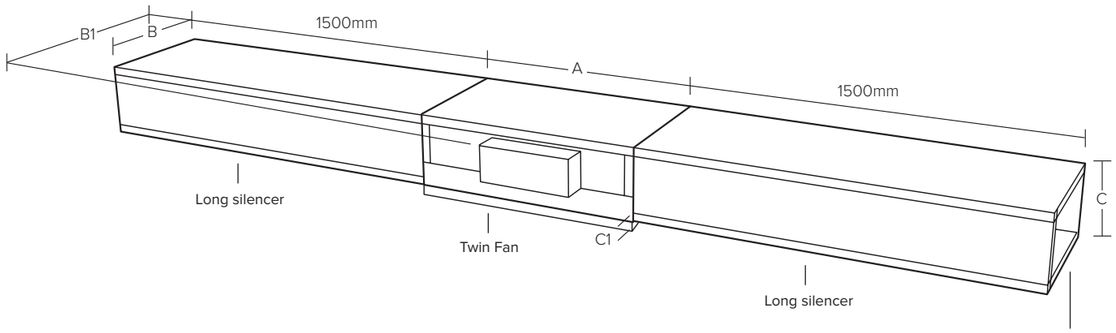

End panel on Twin Fan can be removed and connected to end of silencer

UNIT	CODE	DESCRIPTION	A	B	B1 + CONTROL (108mm)	C	C1 + (39mm)	WEIGHT (Kg)
1	AVT1-SYS2	Size 1 twin fan with 2 standard matched silencers	3931	544	652	250	289	138
2	AVT2-SYS2	Size 2 twin fan with 2 standard matched silencers	3968	544	652	285	324	140
3	AVT3-SYS2	Size 3 twin fan with 2 standard matched silencers	4186	681	789	334	373	179
4	AVT4-SYS2	Size 4 twin fan with 2 standard matched silencers	4229	681	789	376	415	180
5	AVT5-SYS2	Size 5 twin fan with 2 standard matched silencers	4531	827	935	433	472	232
6	AVT6-SYS2	Size 6 twin fan with 2 standard matched silencers	4729	921	1029	545	584	331
7	AVT7-SYS2	Size 7 twin fan with 2 standard matched silencers	4892	1019	1127	575	614	375
8	AVT8-SYS2	Size 8 twin fan with 2 standard matched silencers	5238	1244	1352	615	669	495
9	AVT9-SYS2	Size 9 twin fan with 2 standard matched silencers	5238	1244	1352	615	669	494

The above dimensions and weights are guides only. Contact Nuaire for further details. C1 = maximum depth of unit with access panel lowered. For external systems contact Nuaire.

ELECTRICAL AND SOUND

1. Unweighted induct inlet octave band Sound Power level - dB re 1pW
2. Unweighted induct outlet octave band Sound Power level - dB re 1pW
3. Casing radiated octave band Sound Power level - dB re 1pW

CODE	DUCT CONN.	SUPPLY (V/Freq Hz/Phase)	FLC (amps)	SC (amps)	INPUT POWER (Max) (W)	FAN SPEED (Nominal)		FREQUENCY (Hz) 63	125	250	500	1K	2K	4K	8K	*CASING RADIATED FREE FIELD dBA @ 3m (Spherical Radiation)
AVT1-SYS2	200	230/50/1	0.75	0.75	85	3300	1	67	61	48	36	31	32	30	33	20
							2	69	63	48	36	34	35	31	34	
							3	61	53	43	34	25	21	23	17	
AVT2-SYS2	200	230/50/1	1.4	1.4	170	4000	1	73	65	54	44	40	37	36	39	26
							2	75	67	54	44	43	40	37	40	
							3	67	59	49	40	31	27	29	23	
AVT3-SYS2	250	230/50/1	1.35	1.35	170	2500	1	72	64	62	40	34	32	30	32	31
							2	76	67	62	47	40	41	35	39	
							3	68	59	59	45	31	30	28	24	
AVT4-SYS2	315	230/50/1	3.1	3.1	500	3400	1	79	73	64	56	53	51	49	47	36
							2	82	77	63	57	59	57	53	48	
							3	73	66	60	55	46	43	45	34	
AVT5-SYS2	315	230/50/1	3.5	3.5	550	2400	1	69	64	53	42	35	38	35	32	25
							2	71	66	55	46	44	43	40	36	
							3	62	55	51	43	33	28	32	22	
AVT6-SYS2	400	230/50/1	2.9	2.9	450	1700	1	72	73	57	45	41	44	40	37	30
							2	75	75	57	46	42	45	42	39	
							3	66	64	54	44	29	28	33	22	
AVT7-SYS2	400	230/50/1	3.5	3.5	790	1700	1	73	69	56	46	42	43	39	40	29
							2	76	70	57	48	49	49	44	44	
							3	67	59	54	46	36	33	37	27	
AVT8-SYS2	500	230/50/1	3.2	3.2	710	1100	1	69	69	54	39	37	43	38	35	27
							2	71	71	56	44	46	48	42	38	
							3	62	60	53	42	33	31	34	23	
AVT9-SYS2	500	400/50/3	1.85	1.85	1000	1500	1	74	70	59	46	41	44	44	38	32
							2	76	71	62	51	51	50	48	41	
							3	67	60	59	49	38	34	40	27	

*Break out fan only

AIRE-VOLVE SILENCER SYSTEM 3

PERFORMANCE & TECHNICAL INFORMATION

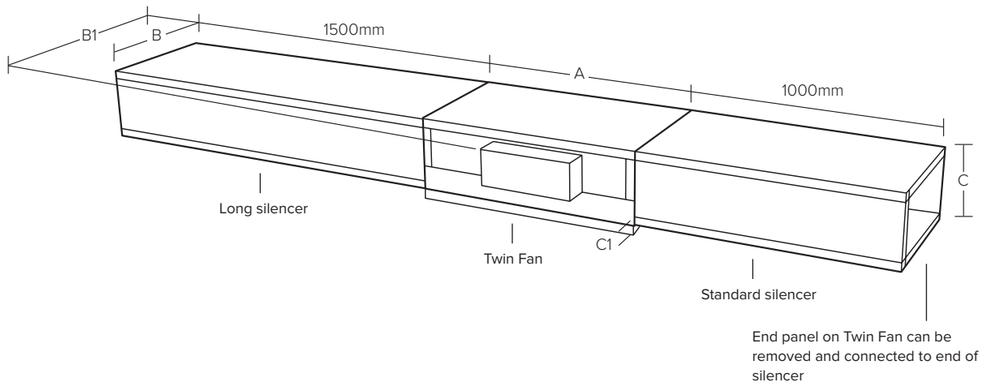

UNIT	CODE	DESCRIPTION	A	B	B1 + CONTROL (108mm)	C	C1 + (39mm)	WEIGHT (Kg)
1	AVT1-SYS3	Size 1 twin fan with 1 long/1 standard matched silencer	3431	544	652	250	289	124
2	AVT2-SYS3	Size 2 twin fan with 1 long/1 standard matched silencer	3468	544	652	285	324	126
3	AVT3-SYS3	Size 3 twin fan with 1 long/1 standard matched silencer	3686	681	789	334	373	162
4	AVT4-SYS3	Size 4 twin fan with 1 long/1 standard matched silencer	4729	681	789	376	415	163
5	AVT5-SYS3	Size 5 twin fan with 1 long/1 standard matched silencer	4031	827	935	433	472	211
6	AVT6-SYS3	Size 6 twin fan with 1 long/1 standard matched silencer	4229	921	1029	545	584	306
7	AVT7-SYS3	Size 7 twin fan with 1 long/1 standard matched silencer	4392	1019	1127	575	614	318
8	AVT8-SYS3	Size 8 twin fan with 1 long/1 standard matched silencer	4738	1244	1352	615	669	464
9	AVT9-SYS3	Size 9 twin fan with 1 long/1 standard matched silencer	4738	1244	1352	615	669	461

The above dimensions and weights are guides only. Contact Nuaire for further details. C1 = maximum depth of unit with access panel lowered. For external systems contact Nuaire.

ELECTRICAL AND SOUND

1. Unweighted induct inlet octave band Sound Power level - dB re 1pW
2. Unweighted induct outlet octave band Sound Power level - dB re 1pW
3. Casing radiated octave band Sound Power level - dB re 1pW

CODE	DUCT CONN.	SUPPLY (V/Freq Hz/Phase)	FLC (amps)	SC (amps)	INPUT POWER (Max) (W)	FAN SPEED (Nominal)		FREQUENCY (Hz) 63	125	250	500	1K	2K	4K	8K	*CASING RADIATED FREE FIELD dBA @ 3m (Spherical Radiation)
AVT1-SYS3	200	230/50/1	0.75	0.75	85	3300	1	67	61	48	36	31	32	30	33	20
							2	72	63	51	43	41	41	35	37	
							3	61	53	43	34	25	21	23	17	
AVT2-SYS3	200	230/50/1	1.4	1.4	170	4000	1	73	65	54	44	40	37	36	39	26
							2	78	69	57	49	47	47	41	44	
							3	67	59	49	40	31	27	29	23	
AVT3-SYS3	250	230/50/1	1.35	1.35	170	2500	1	72	64	62	40	34	32	30	32	31
							2	79	69	67	52	47	44	37	43	
							3	68	59	59	45	31	30	28	24	
AVT4-SYS3	315	230/50/1	3.1	3.1	500	3400	1	79	73	64	56	53	51	49	47	36
							2	83	80	69	63	66	63	58	51	
							3	73	66	60	55	46	43	45	34	
AVT5-SYS3	315	230/50/1	3.5	3.5	550	2400	1	69	64	53	42	35	38	35	32	25
							2	71	66	60	53	50	49	50	44	
							3	62	55	51	43	33	28	32	22	
AVT6-SYS3	400	230/50/1	2.9	2.9	450	1700	1	72	73	57	45	41	44	40	37	30
							2	75	76	61	56	46	50	48	45	
							3	66	64	54	44	29	28	33	22	
AVT7-SYS3	400	230/50/1	3.5	3.5	790	1700	1	73	69	56	46	42	43	39	40	29
							2	77	69	63	56	54	55	53	49	
							3	67	59	54	46	36	33	37	27	
AVT8-SYS3	500	230/50/1	3.2	3.2	710	1100	1	69	69	54	39	37	43	38	35	27
							2	71	71	60	51	50	54	50	45	
							3	62	60	53	42	33	31	34	23	
AVT9-SYS3	500	400/50/3	1.85	1.85	1000	1500	1	74	70	59	46	41	44	44	38	32
							2	76	71	66	59	55	55	55	48	
							3	67	60	59	49	38	34	40	27	

*Break out fan only

AIRE-VOLVE CONSTANT PRESSURE TWIN FANS
BENEFITS

PRECISE VENTILATION
The only multi-room ventilation system to provide local 'on demand' control.

GUARANTEED VENTILATION
'Hall effect' airflow sensor provides 12 hour automatic changer in the event of fan/motor failure, guaranteeing ventilation 24/7.

QUIET OPERATION
Does not generate noise by throttling back on balancing dampers required in conventional systems.

TRUE DEMAND VENTILATION
Only the areas requiring ventilation receive ventilation.

SAVES ENERGY
Up to 70% saving over conventionally controlled central systems.
- Not needlessly extracting conditioned air
- Fan speed/motor power dictated by demand requirement.

UNIQUE DIRECT ACTING MULTI-POSITION DAMPER NRG GRILLE
Ensures operation only when room occupied with integrated PIR.

PRE-WIRED
All components assembled, wired and tested at the Nuaire manufacturing facility.
- Simply plug and go. No wiring required between fan and dampers.

MATCHED SILENCER OPTIONS
Double walled Aluzinc construction and 35mm infill acoustic lining providing the best acoustic solution.
Note: External units are not fully acoustic lined as standard.

DUCT MOUNTED CVD DAMPER
For unobtrusive flexibility.

INTERNAL OR EXTERNAL
Twin fan options are available in internal or external up to 1.9m³/s. For larger duties contact Nuaire.

LESS POWER CONSUMPTION
System works at reduced duty therefore consumes less power and is very quiet.

WARRANTY
Ecosmart Constant Pressure has a 5 year warranty.

Note: These units have the pressure sensor configured for extract application. For supply applications please contact Nuaire.
Note: External fans and silencers have pitched roofs.
Note: For further details on Constant Pressure single fan options, please contact Nuaire.

WHAT IS CONSTANT PRESSURE?
Constant Pressure Variable Volume systems (CPVV) are systems of fans, controls & sensors installed in a multi-room ducted system. The system is intended to provide continuous background ventilation when the served spaces are unoccupied and will automatically increase the ventilation rate when any room is occupied to the design requirements. Only the room requiring the increased ventilation will receive the ventilation.

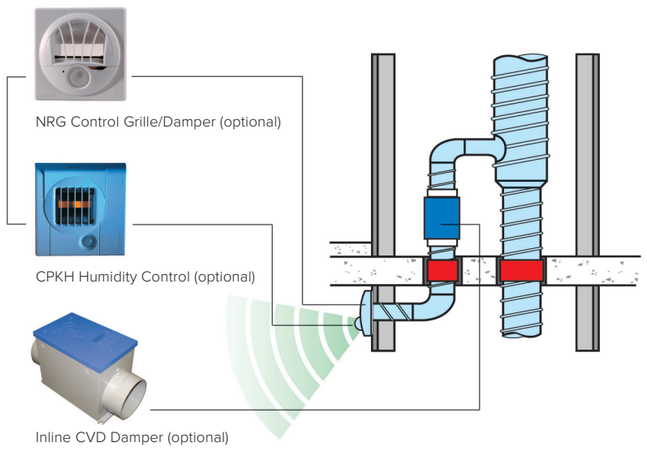

AIRE-VOLVE CONSTANT PRESSURE TWIN FANS
TECHNICAL INFORMATION

HOW DOES CONSTANT PRESSURE WORK?
Independent extract grilles are installed at duct termination points in each of the spaces served, the grilles (for the benefit of this exercise we will consider our NRG grilles) are set to provide one of four boost ventilation rates. They are connected independently to a 230V AC supply via 230/12V transformers.

The grilles have in built occupancy sensors (PIR) and when the PIR detects movement the grille is driven open, when a grille opens the system pressure falls, the fan control detects the change and adjusts the motor speed to maintain the target pressure.

Grilles will stay open for approximately twenty minutes after the last movement has been seen and when it closes the control again compensates for the change in system pressure by adjusting fan speed.

By opening the grilles the pressure in the system will fall. The control system in the fan senses this and automatically speeds up to provide the higher volume and equalise the system pressure. This works in reverse with the grille closing, increasing the system pressure, automatically reducing the fan speed and again equalising the system pressure. Hence a constant pressure variable volume system. There is no inter-connection between grille/damper and fan.

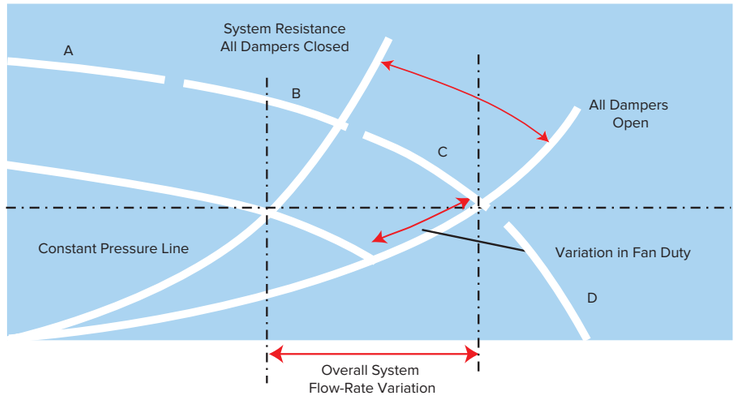

WHAT ARE NRG GRILLES?
A motorised two-position grille offered by Nuaire to compliment the range of constant pressure fans. They have:
- A connecting spigot to suit 125mm duct opening.
- Four settable positions for boost vent rate, Positions 1, 2, 3 & 4 are indicated on the grille by the appropriate number of dots. The grille is pre- set at 5mm open to guarantee the trickle ventilation rate and the other positions are set via a trigger on the front of the grille.
- An integral occupancy sensor (PIR) which is not adjustable.
- They are 12V-AC operating and are supplied with 230/12V AC transformers for installation local to the grille. For ease of installation the transformer can be connected to an independent spur or ring main.
- Integrated run on timer providing approx. twenty minutes overrun, which is non-adjustable.
- Grille resistance is dependent upon the air volume passing through it, see the resistance charts.
- There is no interconnecting wiring between damper/grille & fan.

CVD DAMPER
The CVD damper will work in the same way as the NRG but is mounted in-line and will be 230v operated responding to external switching devices such as humidistat, remote PIR, light switch, door switch etc. The in-line version has an in built motorised volume control damper to regulate the maximum flow through the branch connection. It has an airflow sensor that continuously monitors the airflow and adjusts the damper position accordingly.

THE INTEGRATED CONTROL PACKAGE
Is mounted in the fan chamber and consists of the EST package including:
- The inverter, which is the mechanism that varies the speed of the motors
- A Ecosmart control printed circuit board which converts the data from the pressure transducer to an input signal to the inverter.
- Terminals to connect the incoming mains supply and remote status indicators.

THE PRESSURE TRANSDUCER
Is precisely calibrated and mounted in the fan chamber and is connected to the Ecosmart control board. It continually monitors system pressure, compares the actual to the target allowing the control board to convert the data to an input signal to the inverter, thereby adjusting the motor speed to compensate for the system change.

THE SET-UP BOX
Is mounted on the external face of the unit case, it is connected to the control pack by a low voltage lead and includes
- A potentiometer to set the target pressure.

All achieved whilst fan is running without re accessing the fan chamber.

AIRE-VOLVE CONSTANT PRESSURE TWIN FANS

TECHNICAL INFORMATION

PERFORMANCE - CVD DAMPER

A nominal pressure drop must be allowed in order to ensure adequate airflow through the damper.
To ensure the airflow pattern through the damper produces consistent readings; the pressure drop across the damper should not exceed the recommended value. Recommended values are listed in the table below and shown in the performance envelope of each damper.

*Recommended maximum operating pressure to ensure the damper would work within calibration limits. Keep the duct velocity as low as possible to ensure the system produces the lowest energy usage, preferably below 5m/s.

**Allow 90Pa for duties below 100l/s and 150Pa for duties between 100l/s and 125l/s.

CODE	NOMINAL DESIGN PRESSURE DROP	MAXIMUM PRESSURE ACROSS DAMPER*
CVD100	60Pa	120Pa
CVD125	70Pa	140Pa
CVD150	80Pa	160Pa
CVD200	90Pa**	200Pa

Performance envelope for CVD100

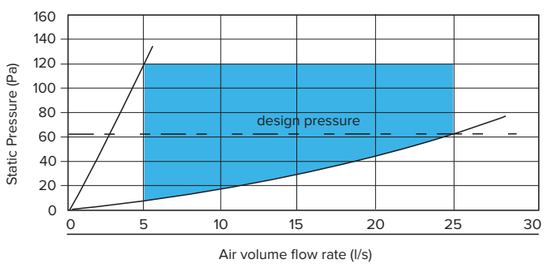

Performance envelope for CVD125

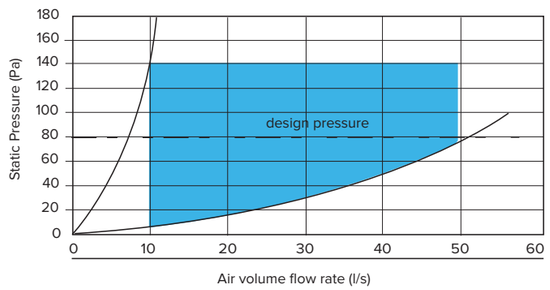

CVD100 Settings

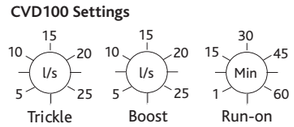

Dial calibration for CVD125

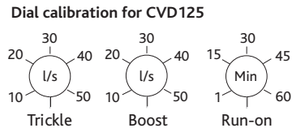

Performance envelope for CVD150

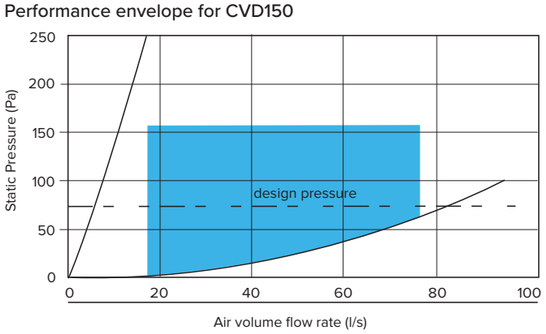

Performance envelope for CVD200

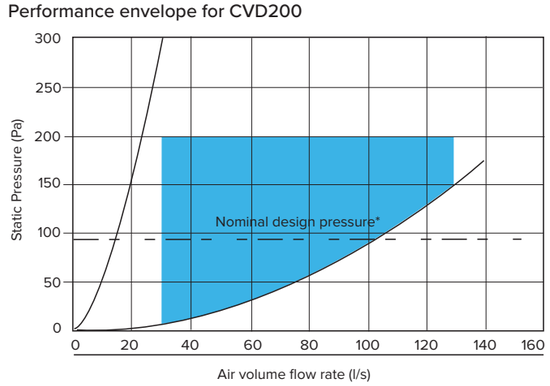

Dial calibration for CVD150

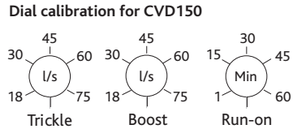

Dial calibration for CVD200

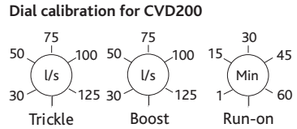

DIMENSIONS (mm) CVD DAMPERS

CODE	A	B	C	D	E	F	WEIGHT (Kg)
CVD100	221	128	165	100	69	295	2
CVD125	300	180	195	125	75	400	3.5
CVD150	300	200	220	150	90	400	3.7
CVD200	300	230	275	200	115	400	4

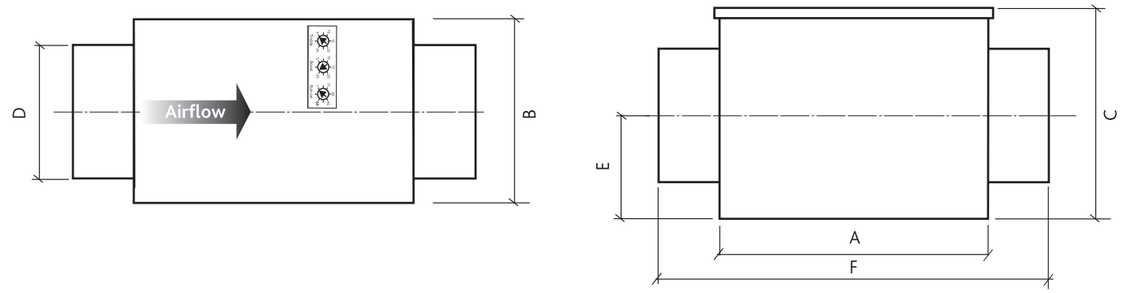

PERFORMANCE - NRG MOTORISED GRILLE/DAMPER

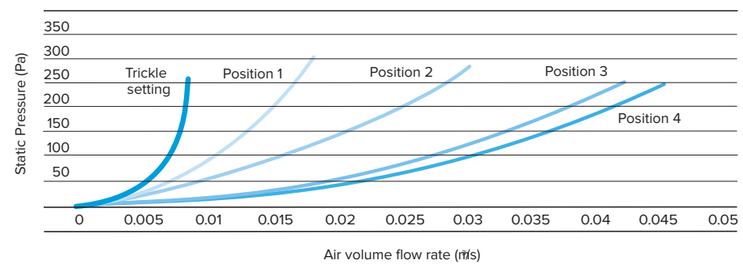

WHAT ARE NRG GRILLES?

A motorised two-position grille offered by Nuaire to compliment the range of constant pressure fans. They have:

- A connecting spigot to suit 125mm duct opening.
- Four settable positions for boost vent rate, Positions 1, 2, 3 & 4 are indicated on the grille by the appropriate number of dots. The grille is preset at 5mm open to guarantee the trickle ventilation rate and the other positions are set via a trigger on the front of the grille.

DIMENSIONS (MM) NRG GRILLE/DAMPER

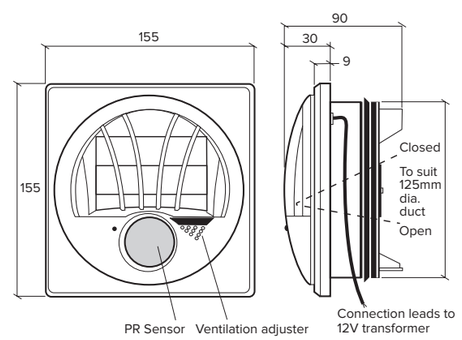

AIRE-VOLVE CONSTANT PRESSURE

PERFORMANCE & TECHNICAL INFORMATION

AVT Internal In-line Twin Fans.
NOTE: External range has pitched roof.

CODING AVTCP1

AV TCP 1
1 2 3 4

SAMPLE CODING

1. Aire-Volve range
2. Twin fan
3. Constant pressure control options
4. Case size 1-9

For external performance curves
(ie. 'X' & 'R' refer to pages 10 & 11).

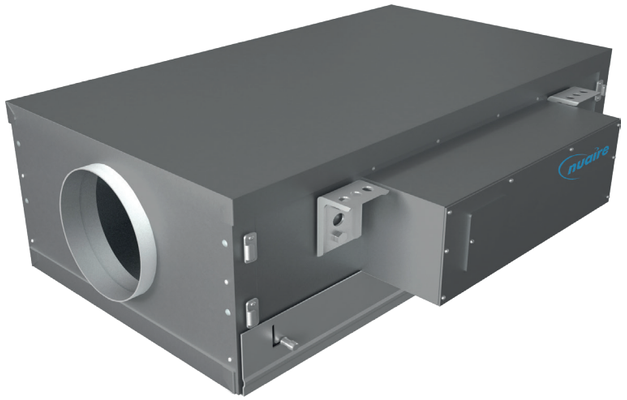

PERFORMANCE CHART

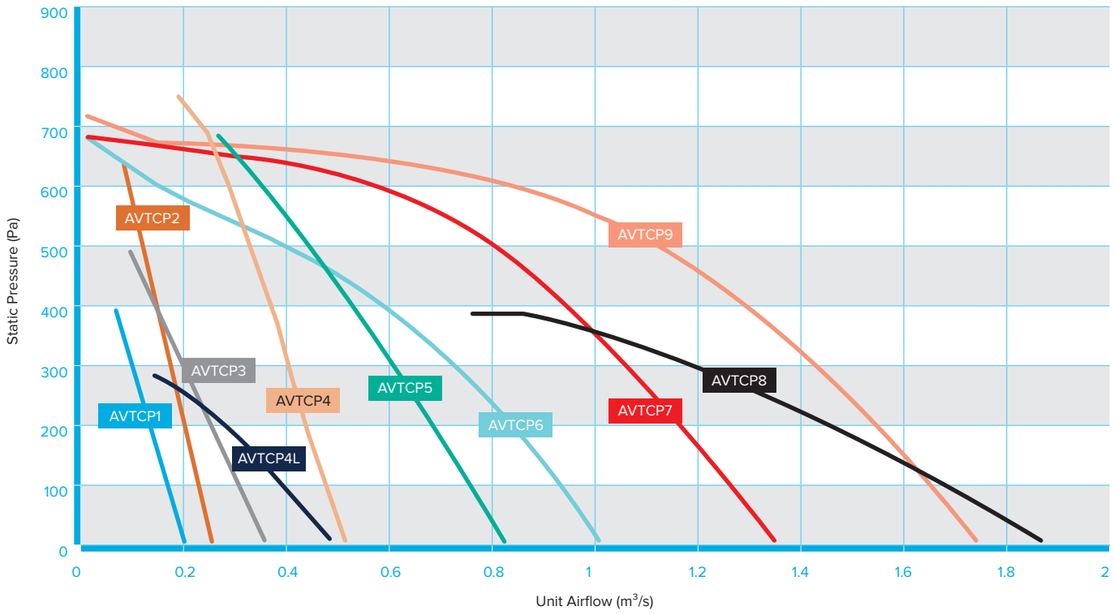

ELECTRICAL AND SOUND

1. Unweighted induct inlet octave band Sound Power level - dB re 1pW
2. Unweighted induct outlet octave band Sound Power level - dB re 1pW
3. Casing radiated octave band Sound Power level - dB re 1pW

CODE	DUCT CONN.	SUPPLY (V/Freq Hz/Phase)	FLC (amps)	SC (amps)	INPUT POWER (Max) (W)	FAN SPEED (Nominal)		FREQUENCY (Hz) 63	125	250	500	1K	2K	4K	8K	*CASING RADIATED FREE FIELD dBA @ 3m (Spherical Radiation)
AVTCP1	200	230/50/1	0.75	0.75	85	3300	1	73	69	63	63	60	56	52	50	20
							2	75	71	63	63	63	59	53	51	
							3	61	53	43	34	25	21	23	17	
AVTCP2	200	230/50/1	1.4	1.4	170	4000	1	79	74	68	69	65	62	58	56	26
							2	81	77	69	69	69	65	59	57	
							3	67	59	49	40	31	27	29	23	
AVTCP3	250	230/50/1	1.35	1.35	170	2500	1	77	74	79	67	63	59	53	51	31
							2	81	77	78	74	69	68	58	58	
							3	67	59	58	45	31	30	28	24	
AVTCP4	315	230/50/1	3.1	3.1	500	3400	1	83	79	80	82	78	74	70	67	36
							2	87	83	80	84	83	80	75	68	
							3	73	65	60	55	45	42	45	34	
AVTCP4L**	315	230/50/1	1.1	1.1	160	1700	1	72	67	67	66	60	57	53	48	29
							2	74	69	69	70	69	62	55	52	
							3	57	55	45	37	30	32	22	29	
AVTCP5	315	230/50/1	3.5	3.5	550	2400	1	74	71	69	68	62	61	57	52	25
							2	76	73	71	72	71	66	62	56	
							3	62	55	51	43	33	28	32	22	
AVTCP6	400	230/50/1	2.9	2.9	450	1700	1	77	80	74	72	66	65	61	54	30
							2	80	82	74	73	67	66	63	56	
							3	66	64	54	44	29	28	33	22	
AVTCP7	400	230/50/1	3.5	3.5	790	1700	1	78	76	73	73	67	65	62	57	29
							2	81	77	74	75	74	71	67	61	
							3	67	59	54	46	36	33	37	27	
AVTCP8	500	230/50/1	3.2	3.2	710	1100	1	74	76	71	66	62	64	60	54	27
							2	76	78	73	71	71	69	64	57	
							3	62	60	53	42	33	31	34	23	
AVTCP9	500	400/50/3	1.85	1.85	1000	1500	1	79	77	76	73	66	66	66	58	32
							2	81	78	79	78	76	72	70	61	
							3	67	60	59	49	38	34	40	27	

*Break out fan only. For electrical and sound data for 'X' and 'R" refer to page 9 & 10. **Available end of July 2012.

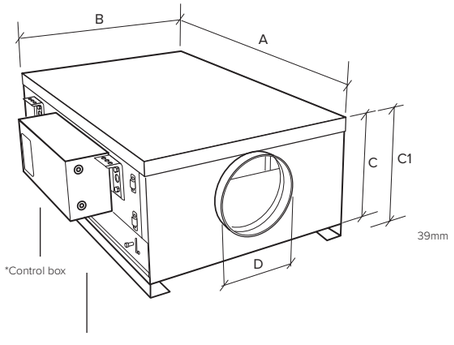

Lowered access bracket to allow panel to slide under matched silencers
*Control box can be mounted on either side of the Twin Fan or remotely using the AVT Control Kit (AVTCK).
Refer to I&M document for fixing details.

AVTCP1-9 DIMENSIONS (mm) AND WEIGHT (Kg)

CODE	A	A +SPIGOT LENGTH (inc.100)	B	DIMS B1 +CONTROL (inc.108)	C	C1	SPIGOT D (dia)	WEIGHT (Kg)
AVTCP1	931	1031	544	652	250	289	200	46
AVTCP2	968	1068	543	652	285	324	200	48
AVTCP3	1186	1286	681	789	334	373	250	67
AVTCP4	1229	1329	681	789	376	415	315	68
AVTCP4L	1531	1631	827	931	401	440	315	100
AVTCP5	1531	1631	827	935	433	472	315	102
AVTCP6	1729	1829	921	1029	545	584	400	153
AVTCP7	1892	1992	1019	1127	575	614	400	179
AVTCP8	2238	2338	1244	1352	615	654	500	267
AVTCP9	2238	2338	1244	1352	615	654	500	244

Bottom access on sizes AVTCP1-9 as standard. Unit sizes 7-9 have a split bottom access panel. AVTCP1-9 are available with top access, ie = AVTCP6TA.

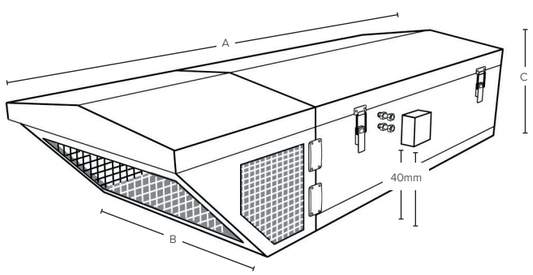

AVTCP1-9 - R DIMENSIONS (mm) AND WEIGHT (Kg)

CODE	B Width	A Length	C Height	SPIGOT D (dia)	WEIGHT (Kg)
AVTCP1-R	716	1620	393	250	64
AVTCP2-R	716	1620	393	250	65
AVTCP3-R	716	1620	393	250	66
AVTCP4-R	857	2066	502	315	111
AVTCP4L-R	857	2066	502	315	110
AVTCP5-R	857	2066	502	315	115
AVTCP6-R	1045	2575	656	400	161
AVTCP7-R	1045	2575	656	400	164
AVTCP8-R	1278	2956	709	500	262
AVTCP9-R	1278	2956	709	500	229

Note: Dim 'A' - add 50mm to include spigot.

MATCHED SILENCERS CODES & DIMENSIONS (mm) AND WEIGHT (Kg)

CODE	SIZE	SILENCER	L	W	H	H1	WEIGHT
AVT1	Standard	AVT1-MSS	1000	544	250	393	32
	Long	AVT1-MSL	1500	544	250	393	46
AVT2	Standard	AVT2-MSS	1000	543	285	393	32
	Long	AVT2-MSL	1500	543	285	393	46
AVT3	Standard	AVT3-MSS	1000	681	334	393	39
	Long	AVT3-MSL	1500	681	334	383	56
AVT4	Standard	AVT4-MSS	1000	681	376	502	39
	Long	AVT4-MSL	1500	681	376	502	56
AVT4L	Standard	AVT4-MSS	1000	681	376	502	39
	Long	AVT4-MSL	1500	681	376	502	56
AVT5	Standard	AVT5-MSS	1000	857	433	502	44
	Long	AVT5-MSL	1500	857	433	502	65
AVT6	Standard	AVT6-MSS	1000	921	545	656	64
	Long	AVT6-MSL	1500	921	545	656	89
AVT7	Standard	AVT7-MSS	1000	1019	575	656	41
	Long	AVT7-MSL	1500	1019	575	656	98
AVT8	Standard	AVT8-MSS	1000	1244	615	709	83
	Long	AVT8-MSL	1500	1244	615	709	114
AVT9	Standard	AVT9-MSS	1000	1244	615	709	92
	Long	AVT9-MSL	1500	1244	615	709	125

H = AVT Height, H1 = AVT-R + AVT-X Height. (H1 includes pitched roof).

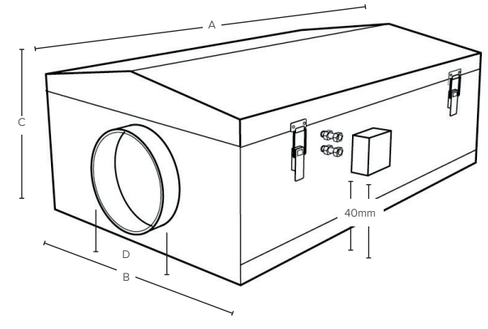

AVTCP1-9 - X DIMENSIONS (mm) AND WEIGHT (Kg)

CODE	A END PANEL (inc.5mm)	A +SPIGOT LENGTH (inc.50)	B	DIMS B1 +CONTROL (inc.40)	C	SPIGOT D (dia)	WEIGHT (Kg)
AVTCP1-X	1120	1220	716	756	393	250	56
AVTCP2-X	1120	1220	716	756	393	250	56
AVTCP3-X	1120	1220	716	756	393	250	57
AVTCP4-X	1466	1566	857	897	502	315	99
AVTCP4L-X	1466	1566	857	897	502	315	99
AVTCP5-X	1466	1566	857	897	502	315	103
AVTCP6-X	1831	1931	1045	1085	656	400	145
AVTCP7-X	1831	1931	1045	1085	656	400	148
AVTCP8-X	2172	2272	1278	1318	709	500	236
AVTCO9-X	2172	2272	1278	1318	709	500	205

Note: External silencers have pitched roofs.

QUICK SELECTION GUIDE

SIZE	AV MOUNTS	FLEXIBLE CONNECTOR	ACOUSTIC FLEXIBLE CONNECTOR	VERTICAL SUPPORT BRACKET (4 pack)	END PANEL WITH RECTANGULAR SPIGOT (wxh)	'R' GRILLE OUTLET MODEL (External only)
1	NAV3/A	CFC25	ACFXRD250	AVT-SB4	AVT1-RS	AVT1-R-MOD
2	NAV3/A	CFC25	ACFXRD250	AVT-SB4	AVT2-RS	AVT2-R-MOD
3	NAV3/A	CFC25	ACFXRD250	AVT-SB4	AVT3-RS	AVT3-R-MOD
4	NAV3/A	CFC31	ACFXRD315	AVT-SB4	AVT4-RS	AVT4-R-MOD
5	NAV3/A	CFC31	ACFXRD315	AVT-SB4	AVT5-RS	AVT5-R-MOD
6	NAV3/A	CFC40	ACFXRD400	AVT-SB4	AVT6-RS	AVT6-R-MOD
7	NAV3/A	CFC40	ACFXRD250	AVT-SB4	AVT7-RS	AVT7-R-MOD
8	NAV6/A	CFC50	ACFXRD500	AVT-SB4	AVT8-RS	AVT8-R-MOD
9	NAV6/A	CFC50	ACFXRD500	AVT-SB4	AVT9-RS	AVT9-R-MOD

Note: If isolator is required code is AVT-ISO.

AIRE-VOLVE TWIN FANS (INLINE INTERNAL)
CONSULTANT SPECIFICATION

VENTILATION SYSTEM DESCRIPTION
The main extract twin fan shall be as indicated on the drawings and in accordance with the relevant fan schedule. The stale air shall be extracted from the space using an energy efficient demand ventilation principle; the system shall have its volume flow rate of air varied by a range of low voltage sensors and enablers.

FAN DESCRIPTION
The unit shall be double skinned with 35mm infill panels and shall be manufactured from heavy gauge, corrosion resistant Aluzinc steel, internally lined with acoustic material. Fully detachable panels for maintenance/service.

Note: External units do not have 35mm acoustic infil as standard. If infil is required contact Nuaire.

The fan should be with an 'inline assembly', positioned in series for optimum performance.

Run and standby fan assemblies to incorporate fan impeller and EC motors selected to provide the most energy efficient solution conforming to part L regulations. Units shall be direct drive with high efficiency motors as standard. EN60034-30 motors fitted with 'hall effect' air flow failure monitoring, units suitable for operation in ambient temperatures of 40ºC.

The Fan unit shall have a 5 year warranty.

The unit and ancillaries shall be of the Aire-Volve type with Ecosmart controls as manufactured by Nuaire Ltd.

INSTALLATION REQUIREMENTS
The mechanical contractor shall ensure that all necessary ancillaries are included eg. AV mounts, flexible connections, attenuators, etc. The contractor shall allow for all necessary ductwork transformations to and from the fan unit and any associated components in accordance with the manufacturer's recommendations, DW 144 and general good practice.

SYSTEM OPERATION
The extract fan shall automatically vary its speed as it receives signals from one of the interconnected sensors. When the signal is received the fan shall either increase speed gradually until the required level is achieved or it will work on a trickle and boost principle. This will then move the fan duty point from trickle/background ventilation rate to the required boost ventilation rate.

Both the trickle and boost rates are infinitely variable, easy to adjust and remove the need of a main balancing damper in accordance with Part L.

FAN CONTROL DESCRIPTION
The acoustically lined low noise twin fan shall be controlled by an integrated Ecosmart control panel mounted adjacent to the fan unit. The Ecosmart control enables the fan's speed to be varied automatically as conditions in the ventilated space change by linking low voltage sensors or as the low voltage user control is adjusted. It also enables multiple fans to be directly interlinked.

The fans shall have the following energy saving and operational functions integrally installed within it, all components will be pre-wired and fitted by the manufacturer:

- Auto change-over on fan failure
- Auto duty share every 12 hours of run time
- Integral frequency inverter/speed controller
- Integral adjustable run-on timer
- Maximum and minimum speed adjustment/setting (trickle and boost)
- Volt free run & failure/status indication
- 0-10V BMS interface for remote operation
- Low voltage interface with second fan or supply fan
- Multiple low voltage sockets for interconnection of sensors or fans
- Background ventilation/trickle enable switch.

Fan, Ecosmart controls and associated sensors/controllers shall be manufactured by Nuaire Ltd.

INSTALLATION
By the appointed contractor.

The Aire-Volve twin fan can be mounted in any orientation (internal units only). To mount vertically, specifically designed brackets are available from Nuaire. There is also an option to mount the unit vertically downwards.

Mechanical installation requires mounting of the extract unit in the designated position and connection to the associated duct work.

A retained, full length sliding access panel (internal units only) allows for quick and easy installation and maintenance. External units have a flush top or bottom access panel.

Electrical installation requires the provision and connection of single or three phase electrical supply at the fan.

The user control (ES-LCD) can be re-positioned (internal units only) to the opposite side of the unit or remotely mounted using the AVT-CK (Control Kit).

The user control and low voltage sensor are supplied complete with a 10m length of low voltage, pre-plugged cable.

COMMISSIONING
By the appointed qualified commissioning engineer in accordance with CIBSE commissioning Code A: Air Distribution Systems.

The systems should be commissioned in the way described in the aforementioned document and the minimum and maximum speed adjustment with the Ecosmart control panel should be set to provide the required ventilation rates. These should be adjusted until the required air volume flow rate is achieved on the approved measuring device.

The manufacturer's recommendations should be observed at all times.

Nuaire's blowers are compliant to EC/327/2011.

AIRE-VOLVE CONSTANT PRESSURE TWIN FANS
CONSULTANT SPECIFICATION

CONSTANT PRESSURE EXTRACT SYSTEM
The main extract fan shall be as indicated on the drawings and in accordance with the relevant fan schedule. The vitiated air shall be extracted from the space using an energy efficient constant pressure principle via a variable air volume motorised damper/grille installed in each area, as detailed in the schedule.

Fan description as opposite.

SYSTEM OPERATION
The extract fan shall automatically vary its speed as the system pressure varies; the variation in pressure is caused by the opening and closing of the Nuaire inline CVD or surface mounted NRG damper. The damper is autonomous of the fan and requires no field wiring connecting it to the fan. The damper positions are open (boost) and closed (trickle). The inline damper has an integrated airflow sensor which continuously monitors and controls the amount of air being moved. (The air volume is adjusted via minimum and maximum potentiometers on the side of the CVD damper and a run on timer).

The damper/grille shall be as manufactured by Nuaire Ltd.

The duct mounted damper CVD requires a 230V connection/power supply. Signal from 230V switch live ie. light switch, PIR, humidistat etc.

(If the NRG grille is installed it shall be connected to a 12V ac supply via the inclusive 230V transformer unit and has an integral PIR, two position damper and overrun timer).

Once commissioned and set to work, the fan will maintain the preset pressure by varying its speed as the ventilation requirement within each area varies ie. as dampers open and close. If the requirement exceeds the maximum or minimum limit, the fan will remain at the design/ limiting speed.

FAN CONTROL DESCRIPTION
The acoustically lined low noise twin fan shall be controlled by an integrated Ecosmart control panel mounted adjacent to the fan unit. The Ecosmart control enables the fan's speed to be varied automatically as conditions in the ventilated space change by linking low voltage sensors or as the low voltage user control is adjusted. It also enables multiple fans to be directly interlinked.

The fans shall have the following energy saving and operational functions integrally installed within it, all components will be pre-wired and fitted by the manufacturer:

- Auto change-over on fan failure
- Auto duty share every 12 hours of run time
- Integral frequency inverter/speed controller
- Integral adjustable run-on timer
- Maximum and minimum speed adjustment/setting (trickle and boost)
- Volt free run & failure/status indication
- 0-10V BMS interface for remote operation
- Low voltage interface with second fan or supply fan
- Multiple low voltage sockets for interconnection of sensors or fans
- Background ventilation/trickle enable switch.

Fan, Ecosmart controls and associated sensors/controllers shall be manufactured by Nuaire Ltd.

CVD FEATURES
- Trickle/boost flow rate.
- Run on timer.
- Externally adjusted settings.
- CVD acts as a balancing damper.
- MEMS (air flow sensor) provide precise measurements and control of flow rate.

The Fan unit shall have a 5 year warranty, first year parts and labour the remainder parts only.

INSTALLATION
By the appointed contractor.

The Aire-Volve twin fan can be mounted in any orientation (internal units only). To mount vertically, specifically designed brackets are available from Nuaire. There is also an option to mount the unit vertically downwards.

Mechanical installation requires mounting of the extract unit in the designated position and connection to the associated duct work.

A retained, full length sliding access panel (internal units only) allows for quick and easy installation and maintenance. External units have a flush top or bottom access panel.

Electrical installation requires the provision and connection of single or three phase electrical supply at the fan.

The user control can be re-positioned (internal units only) to the opposite side of the unit or remotely mounted using the AVT-CK (Control Kit).

The user control and low voltage sensor are supplied complete with a 10m length of low voltage, pre-plugged cable.

COMMISSIONING
By the appointed qualified commissioning engineer in accordance with CIBSE commissioning Code A: Air Distribution Systems.

The systems should be commissioned in the way described in the aforementioned document and the minimum and maximum speed adjustment with the Ecosmart control panel should be set to provide the required ventilation rates. These should be adjusted until the required air volume flow rate is achieved on the approved measuring device.

NOTE: NRG & CVD should not be mixed on same system.

The manufacturer's recommendations must be observed at all times.

PRECISE VENTILATION. THE ONLY MULTI-ROOM VENTILATION SYSTEM TO PROVIDE LOCAL 'ON DEMAND' CONTROL.

QUIET OPERATION
Does not generate noise by throttling back on balancing dampers required in conventional systems.

DUCT MOUNTED CVD DAMPERS
For unobtrusive flexibility.

SAVES ENERGY
Up to 70% saving over conventionally controlled central systems. Doesn't needlessly extract conditioned air. Fan speed/motor power is dictated by demand requirement.

UNIQUE DIRECT ACTING MULTI-POSITIONED DAMPER NRG GRILLE
Ensures operation only when room is occupied with integrated PIR2.

MATCHED DOUBLE WALLED SILENCERS
Aluzinc silencers with 35mm acoustic in fill provides the quietest solution.

PRE-WIRED
All components are assembled, wired and tested at Nuaire facility, simple 'plug and go'.

ECOSMART OPTIONS AVAILABLE

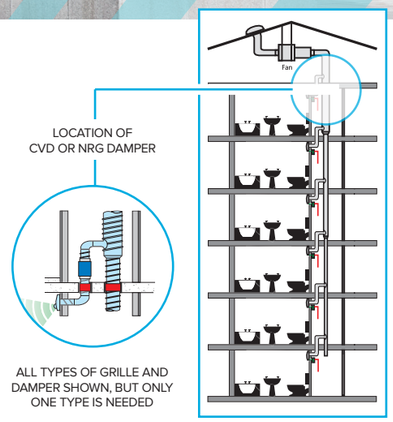

NOTES

COMMERCIAL
WWW.NUAIRE.CO.UK/COMMERCIAL

RESIDENTIAL
WWW.NUAIRE.CO.UK/RESIDENTIAL

INTERNATIONAL
WWW.NUAIRE.CO.UK/INTERNATIONAL

nuaire
PIONEERING NEW AIR TECHNOLOGY

WESTERN INDUSTRIAL ESTATE | CAERPHILLY | CF83 1NA
T 029 2085 8200 **F** 029 2085 8300 **E** INFO@NUAIRE.CO.UK
WWW.NUAIRE.CO.UK

Part no. 672080
v1 August 2026